IMF WORKING PAPER

WP/88/18

INTERNATIONAL MONETARY FUND

Fiscal Affairs Department

The Case for Earmarked Taxes: Theory and an Example

Prepared by Ranjit S. Teja *

Authorized for Distribution by Peter S. Heller

February 18, 1988

Abstract

The earmarking (or setting aside) of revenues from various taxes for specific types of expenditure is a much maligned fiscal practice. The paper examines a number of theoretical arguments and institutional circumstances under which earmarking (even widespread earmarking) may be welfare enhancing. The paper also questions the criticism that earmarking seriously erodes budgetary efficiency, and draws on the experience of Colombia to demonstrate that the worst fears of critics do not necessarily come to pass.

JEL Classification numbers:
3220,3230

---

* I am indebted to Thanos Catsambas, Peter Heller, A. Premchand, S. Ramachandran, and Jaime Vázquez for helpful comments and discussion.

Contents

Summary

Earmarking revenues for specific uses is frequently criticized as an unnecessary constraint in the efficient provision of publicly supplied goods and services. Detractors of earmarking portray such provisions as a cause of budget inflexibility and, ultimately, not amounting to much more than a bald attempt by special interest groups to protect favored expenditures. This paper attempts to redress the balance, emphasizing the welfare-enhancing aspects of earmarking and drawing attention to the possibility that earmarking may be more a mechanism for escaping (rather than a cause of) economic and budgetary inefficiencies.

Although one can think of a number of positive arguments explaining the existence of earmarking, the normative case for earmarked taxes rests fundamentally on the assumption that individuals and groups in society have differing preferences for public and private goods and services. Earmarking allows individuals to express their preferences for public goods with tax dollars--in much the same way they express their preferences for potatoes with outlays earmarked to the production of potatoes--and to resolve their differences in socially desirable ways. The analysis also emphasizes the rule-enforcing aspects of earmarking clauses when there is conflict of interest between bureaucracies and legislatures or when moral hazard forces legislatures to forego socially beneficial expenditures. Where exclusion in public consumption is feasible, earmarking can be seen as an application of the "benefits principle of taxation" with taxes paid by beneficiaries earmarked to the provision of that public good. In this case, an earmarked tax is much like a user charge and differs only in its mode of collection.

The paper also describes the experience of Colombia and argues that, despite shortcomings, the system has not carried earmarking to the point that it imposes significant constraints on efficient budgeting and budget flexibility. In fact, it is suggested that earmarking was set up as a defense against poor budgeting and expenditure control practices.

I. Introduction

The earmarking of taxes refers to the designation of funds--either from a single tax base or from a wider pool of revenues--to a particular end use. Typical examples include the earmarking of revenues from property taxes for education, gasoline taxes for highway construction, and payroll taxes for social security payments. This may be contrasted with general fund finance where expenditures are financed from consolidated receipts. For a number of reasons, the practice has been condemned as wasteful and inefficient. At the bottom of much of this criticism is the homely analogy with households constrained to spending the receipts from each source of income for specific items of consumption: which economist has not experienced a twinge of shame when earmarking income from a spouse's new job toward the down payment on a house, or converting windfall profits into a vacation budget? Nevertheless, earmarking provisions are a pervasive fiscal phenomenon in both developed and developing economies and are even written into the constitutions of some countries.

Section II of this paper assesses the theoretical case for earmarking and also provides a positive analysis of its widespread existence. "Theoretical" refers to the conventional analysis of welfare economics and public choice theory. This may be distinguished from the "practical" aspects of public administration and budgeting. Readers from the latter tradition--particularly those familiar with the extreme forms of earmarking found in parts of Latin America and Africa--are apt to receive the arguments in this section with, at best, courteous cynicism. At the risk of some oversimplification, this may be attributed to an underlying tendency to view the task of budgeting and administration from the point of view of the representative household, or, what amounts to the same thing, from the perspective of the benevolent social planner. This attitude prevents a proper appreciation of what emerges in Section II as the true role of earmarking in public finance: that of a mechanism for the resolution of differing and conflicting preferences in society. In reading Section II, it is also important to bear in mind two sets of distinctions: (a) normative versus positive analysis; and (b) arguments supporting earmarking for specific expenditures versus full-scale earmarking for all public expenditure.

Standard examples of earmarked taxes--the gasoline tax earmarked for highway construction or maintenance and the social security tax--have fostered the view that they are basically a means of taxing only those who directly benefit from a certain expenditure. (The obverse of this phenomemenon is incredulity at seeing taxes on liquor earmarked for education rather than for the rehabilitation of alcoholics.) It is remarkable then that the theoretical literature on earmarked taxes deals almost exclusively with "pure" public goods (i.e., characterized by the impossibility or inefficiency of excluding any member of a community once a good has been supplied), a context in which viewing earmarked taxes as "benefit taxes" is ambiguous (but, as we shall see, not

entirely meaningless). The economic rationale--and the political motives--for earmarking taxes are more subtle than suggested by the benefits theory of taxation. However, once impure public goods are considered (goods with externalities, local public goods, etc.), the benefits theory of taxation moves center stage as a normative criterion. In that case an earmarked tax is essentially a user charge and differs only in its mode of collection.

It will thus be most fruitful to taxonomize the theoretical rationale for earmarked taxes according to the public goods characteristics of the commodity or service in question. Section II.1 and II.2 examine alternative perspectives for dealing with "pure" public goods; this may loosely be thought of as the "pure theory of earmarked taxation." Section II.3 covers the economics of user charges and the potential choice between earmarking and user charges. The part played by earmarking as a rule-enforcing device is examined in Sections II.4 and II.5. Finally, Section II.6 presents some additional considerations not formally modeled in the literature.

Section III briefly examines the case against earmarking from the perspective of efficient budgeting and administration. Section IV utilizes the framework developed in the previous two sections to assess the practice of earmarking in Colombia. The paper concludes with some observations on the circumstances under which earmarking may be recommended.

II. The Theoretical Rationale for Earmarked Taxes

1. Lindahl's theory

Decisions on the provision of public goods may be taken either in the context of a vigorous democracy with an active legislature or, alternatively, by executive decree. Here, we adopt the former perspective and, in this context, begin by disposing of the questionable analogy with the household that earmarks earnings from different sources for various end uses. This analogy would have been appropriate if it were indeed true that legislatures make decisions the way individuals do. An earmarking provision is then an unnecessary constraint in the utility-maximization problem of allocating the last dollar to yield equal marginal utility in every direction. But it is a fact of life that a legislature is a forum where conflicting preferences are expressed and resolved. Moreover, a legislature, in principle, does not make expenditure decisions without simultaneously determining revenue requirements.

Both these features that distinguish fiscal decision-making from that of the individual household were elegantly captured in the writings of Knut Wicksell and, subsequently, Eric Lindahl over sixty years ago. A by-product of that analysis was a welfare theoretical case for

earmarked taxation based on the Pareto criterion. The main point is that the alternative to earmarked taxes--general fund financing--will result in non-Pareto efficient outcomes.

Following Johansen's (1963) exposition, consider an economy with two pure public goods, G and S, and a composite private good X. Let Y_A and Y_B be the incomes of two types of individuals--A and B--and X_A and X_B their consumption of the private good X. Let h denote A's "tax share" in the financing of total expenditures (G+S), so that B's share is (1-h). Under general fund financing, both public goods are financed by the revenues derived from these lump-sum taxes. Given utility functions $U_A(X_A,G,S)$ and $U_B(X_B,G,S)$, each agent maximizes utility subject to the corresponding budget constraint:

$$Y_A = X_A + h(G+S) \tag{1}$$

$$Y_B = X_B + (1-h)(G+S) \tag{2}$$

yielding the following first-order conditions:

$$dU_A/dG = dU_A/dS \tag{3}$$

$$dU_A/dS = hdU_A/dX_A \tag{4}$$

$$dU_B/dG = dU_B/dS \tag{5}$$

$$dU_B/dS = (1-h)dU_B/dX_B. \tag{6}$$

The system of equations consists of six equations but only five unknowns (G,S,X_A,X_B, and h) and hence is overdetermined. In other words, no tax share h is capable of meeting all the requirements for efficiency.

One way to arrive at a determinate solution is to assume that preferences are identical. Then equations (3) and (5) are duplicated so that we are really left with five equations in five unknowns. But this trivializes the whole problem, robbing fiscal analysis of one of its distinguishing features.

Suppose instead that expenditures on G and S are met from two separate "earmarked" funds. Thus, expenditure on G is met by payment of gG by A and (1-g)G by B; likewise, for S, A pays sS while B pays (1-s)S. Agents now maximize utility functions subject to the new budget constraints

$$Y_A = X_A + gG + sS \tag{1'}$$

$$Y_B = X_B + (1-g)G + (1-s)S \tag{2'}$$

which yields a new set of first order equations

$$dU_A/dG = g dU_A/dX_A \tag{3'}$$

$$dU_A/dS = s dU_A/dX_A \tag{4'}$$

$$dU_B/dG = (1-g) dU_B/dX_B \tag{5'}$$

$$dU_B/dG = (1-s) dU_B/dX_B \tag{6'}$$

The system now consists of six equations and six variables and hence can be solved for the optimal values of G, S, X_A, X_B, g, and s.

Note that rearranging (3')-(6') yields

$$\begin{aligned} (dU_A/dG)/(dU_A/dX_A) + (dU_B/dG)/(dU_B/dX_B) &= 1 \\ (dU_A/dS)/(dU_A/dX_A) + (dU_B/dS)/(dU_B/dX_B) &= 1 \end{aligned} \tag{7}$$

The terms on the left are the sums of A and B's marginal rates of substitution for each public good. The marginal rates of transformation of G and S for X are, by construction, unity. The earmarking solution, then, is equivalent to Samuelson's well known condition for the Pareto efficient allocation of public goods and, indeed is <u>necessary</u> for Pareto efficiency: both individuals can be made better off by moving from general fund financing to earmarking.

This case for earmarking has been couched in terms of numbers of equations and unknowns. However, recalling that the problem is resolved when preferences are identical, it should be clear that the role of earmarking lies in facilitating the mutual accommodation of differing preferences in the economy. Note also that since tax shares are derived from individuals' marginal rates of substitution in utility, the tax shares may be viewed as a form of "benefits taxation." Although everyone consumes the same level of public goods, agents pay for this in accordance with their marginal utility (benefit).

Although the Lindahl theory espouses widespread earmarking for each public good, the accounts can always be consolidated once a consensus has been reached. This prevents the myopia that may arise, as a practical matter, when there are a myriad of special funds in the budget. Also, the analysis presumes that agents continually reassess taxes and expenditures through time.

As students of public economics well know, a fundamental shortcoming of Lindahl's analysis is the assumption that agents in the economy will truthfully reveal their preferences. Equations (3')-(6') state that an individual's tax burden for any particular good is determined by his marginal rate of substitution vis-à-vis private goods. Owing to nonexcludability in consumption inherent in pure public goods, an agent has every incentive to understate the marginal benefit derived

from an additional unit of the public good. Although economists have devised clever (sometimes bizarre) mechanisms for the truthful revelation of preferences that approximate the Lindahl equilibrium, the implementation of Lindahl's solution remains a complex and difficult issue. 1/

2. The public choice perspective

While a mainstream theorist is apt to view earmarking as a constraint on expenditure, the public choice school stands this proposition on its head and argues, instead, that it is general fund financing that imposes constraints on voters' choices. General fund finance involves the acceptance of a budget that effectively requires consumers to purchase (through payment of taxes) a bundle of complex and heterogeneous products. This forces the public to consume goods in a less than optimal mix. As Buchanan has put it, "...any requirement that one stick of butter be purchased with each loaf of bread would surely produce inefficiency in choice..." Public choice theory--like Lindahl's theory--explains the existence of earmarking and draws normative conclusions from its potential role in facilitating individual preferences. The main difference lies in the fact that Lindahl's theory is predicated on complete consensus, whereas public choice theory recognizes the existence of majority voting.

An insightful distinction between earmarked taxation and general fund finance can be illustrated as follows. Under the former, the equilibrium quantity of each public good is determined by a separate vote along with a specified tax, or set of taxes, to finance that expenditure. The opportunity cost to the voter of an additional battleship then is higher taxes rather than reduced expenditures on other public goods. General fund financing, on the other hand, is characterized by separate voting on the size of the budget (tax bills) and the composition of expenditures (expenditure bills). Given the government's separately determined budget constraint, the opportunity cost of an extra battleship is no longer higher taxes but instead reduced expenditure on other public goods. This separation of tax decisions and expenditure decisions lies at the heart of the public choice school's normative case for earmarked taxes.

One strand of this approach--initiated in Buchanan's (1963) seminal paper--argues that the voter who might have approved a tax increase if it were earmarked to, say, environmental protection would oppose it under general fund finance because he or she may expect the increment to be allocated to an unfavored expenditure such as defense. Earmarked taxation then permits a more satisfactory expression of individual preferences. While Buchanan's analysis is basically an exercise in positive economics, it has distinct normative overtones.

1/ For a good review of preference revelation mechanisms, see Mueller (1979).

A second strand--developed in Browning (1975)--draws attention to the possibility of perverse outcomes under general fund financing that may argue for the institution of widespread earmarking. The constraints imposed by the separation of tax decisions and expenditure decisions are sufficiently serious that there is little basis for predicting the outcome under general fund financing. It may well turn out that a lower quantity of a public good will be supplied even if every voter's preference for that good increased.

Both these points can be demonstrated using a simple geometrical device developed by Browning (1975). Consider a community of three voters (A, B, and C) consuming two public goods (G and S), and a composite private good (X). To abstract from distributional issues, it is assumed that tax shares g^i and s^i, i = A,B,C, are exogenously given, as is the market price (marginal cost), p_x, of the private good and that all goods are produced at constant marginal cost. The budget constraint of any agent is:

$$Y^i = p_x X + g^i G + s^i S \tag{8}$$

where Y^i is agent i's fixed income. Each agent maximizes the utility function $U^i(X,G,S)$ subject to the budget constraint (8).

The budget plane defined by equation (8) is depicted in Figure 1 as $B_1B_2B_3$, while the utility function (not drawn in) can be visualized as a sequence of nested bowls tilted against the origin. The optimal consumption bundle is given by the point where a bowl is tangent to the budget plane. This can be mapped on the (G,S) plane as the point E^i. Other bowls that slice the budget plane trace out concentric circles (more generally, ellipses) around E^i, where outer circles represent a lower level of utility as they correspond to bowls nearer the origin. Thus any one circle (or utility contour) is much like an indifference curve but utility declines as one moves away from the innermost circles surrounding E^i.

Two more preliminaries must be set aside before turning to Buchanan and Browning's analyses. First, how is the budget decided under earmarking? Assume, as in Figure 2, that voter A is the median voter on both the issue of G and S to be supplied to the public. 1/ Under simple majority voting, the decisions on G and S are made separately, say, first G and then S. A will immediately gravitate to the point E^A and in so doing will implicitly accede to being taxed first by an amount $g^A G^*$ and then (when choosing S) by an amount $s^A S^*$. This is precisely what is

1/ Note that the three voters' optima are such that, relative to A, C prefers more S, while B prefers less S. This makes A the median voter on the amount of S to be supplied. Likewise, A is also the median voter on the equilibrium quantity of G.

Figure 1

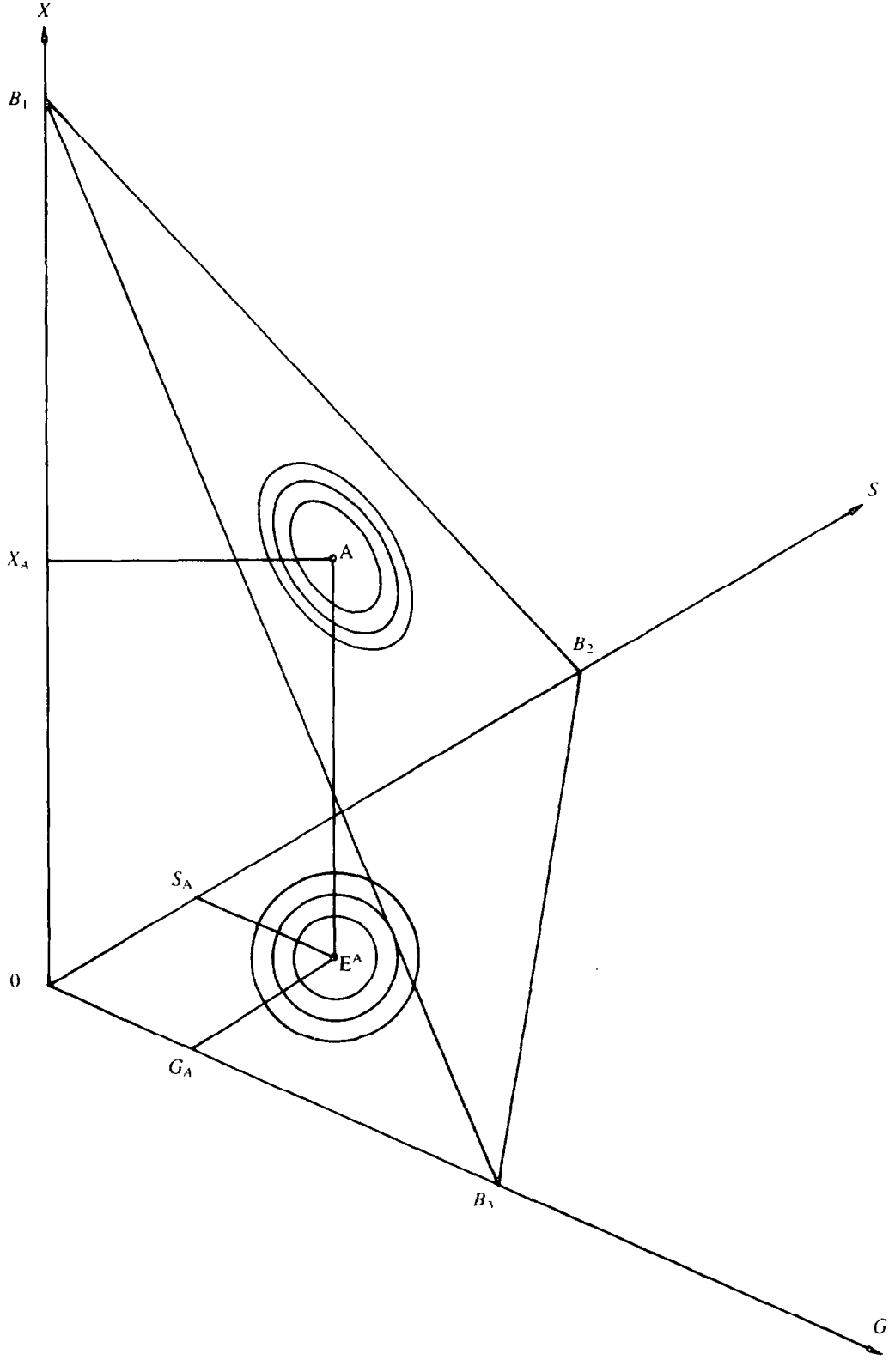

Figure 2

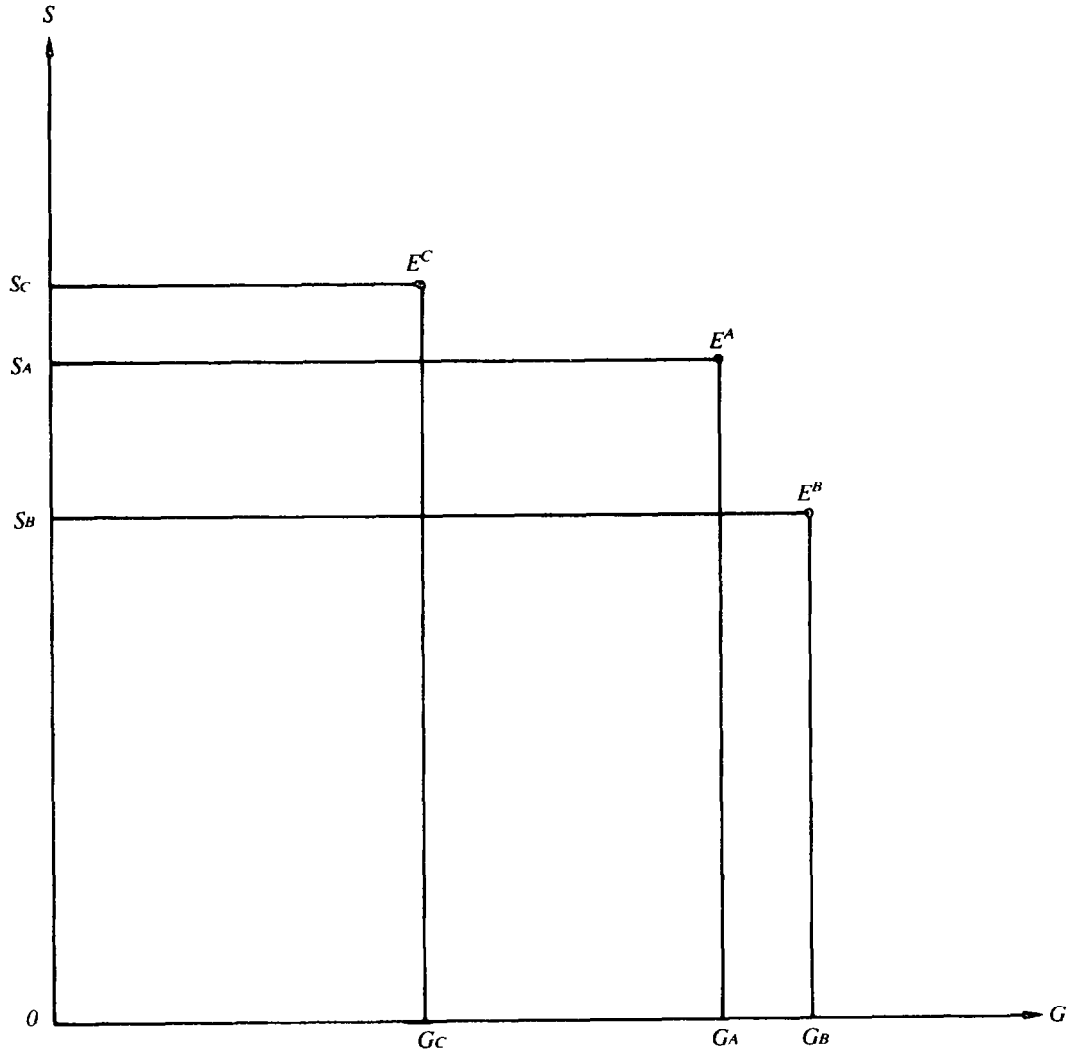

referred to as "earmarking": the practice of taking a decision on each public good, together with a decision on taxes to finance that expenditure, separately from other public goods.

Second, how are the size and the composition of the budget decided upon under general fund finance? The size of the budget is the value of G plus S. For any point (G,S), it is the length along the axes resulting from drawing in the relative price of G and S (the ratio of marginal costs--assumed here, for simplicity, to equal unity). Next, for any given budget size, say MN in Figure 3, an agent maximizes utility by choosing a point where an indifference contour is tangent to it. Consideration of a sequence of budget sizes yields, for each agent, a locus of points describing the preferred composition of the budget for every budget size. These loci are depicted, for simplicity, as straight lines in Figure 3.

In Figure 4, A is assumed to have the median preference as regards both budget composition and budget size. In this special case, the general fund financing and earmarking solutions are identical. On the other hand, in Figure 5, A has the median preference with regard to budget mix, but B has the median preference for budget size. In this case, the general fund financing solution is given by the point K, along the median budget size MN, where A's preferences (regarding budget composition) dominate.

With these preliminaries in hand, we can now turn to the point raised by Buchanan (1963). Buchanan compared earmarking with the case where an exogenous "budgetary authority" sets the budget mix while voters can only choose the size of the budget. In Figure 6, the budgetary authority imposes the mix OR. Given this budget mix, voters must select the overall size of the budget by choosing a point along OR. Each voter's utility is maximized by picking a point along OR where an indifference contour is tangent to it. In the example presented in Figure 6, voter A happens to be the median voter on the size of the budget. Note that the bureaucracy's choice will definitely lower A's welfare, since A is the median voter on the issues of both budget size and budget mix. In the configuration assumed in Figure 6, it also happens to lower everyone's welfare (since the indifference contours passing through the earmarking solution E^A are smaller than those passing through the general fund financing solution).

While the condemnation of general fund finance is stark in this example, the result is obviously not general. In particular, it is arbitrary to assume an exogenous selection of the budget mix (or alternatively, of the size of the budget). As we have already seen, public choice under general fund finance can be generalized to an endogenous selection of both budget size and budget mix. Whenever one voter does not possess the median preference on the issue of both budget

composition and budget size as in Figure 5 (i.e., when the earmarking and general fund financing solutions are different), then at least one of the parties will be worse off by a move to earmarking.

It is worth noting here that neither earmarking nor general fund finance will meet the Samuelsonian criterion for optimality (except by chance), since the tax shares are assumed to be given. However, an examination of Figure 7 reveals that both earmarking and general fund finance are constrained Pareto efficient (constrained, of course, by given tax shares). To see this, consider the utility contours passing through the point E^A (the earmarking solution) and point K (the general fund financing solution). Any point outside the envelope of these contours leaves all three worse off; any movement within the envelope leaves at least one of the three worse off. The moral is that the choice between earmarking and general fund finance ultimately depends on the choice of a social welfare function and there are no easy generalizations. The model is thus useful for predicting support for earmarking provisions but not for drawing normative conclusions.

Turning now to Browning's point about perverse outcomes under general fund financing, suppose that starting from the equilibrium position (G_2,S_2) in Figure 8, all three voters' preference for G increases. This is shown as a rightward shift in each of E^A,HE^B, and E^C to E'^AH,E'^B, and E'^C. Although A remains the median voter on budget composition, A rather than B now determines the actual size of the budget. In Figure 8, the new equilibrium amount of G publicly supplied falls, despite a unanimous increase in preference for G--a paradoxical outcome that could not occur under earmarked taxes. The paradox arises from the dependence on the preferences of the median voter. The issues under earmarking and general fund finance are different--under the latter, one separately chooses budget size and budget composition. The median voter associated with the distinct issues of budget size and budget composition may change, which influences the outcome. No such complication affects decision-making under earmarking.

The public choice approach is frequently received with skepticism. Goode (1984), for example, draws attention to its irrelevance in countries that lack provision for citizen participation. A much stronger criticism of its normative aspects--even in circumstances where they may be valid as in Figure 5--is the underlying assumption that voters continuously (or even once in a while) re-evaluate their position on earmarking. A widely noted tendency (see, for example, Deran (1965)) is for earmarking provisions to become embedded in the state's financial structure and not to be re-evaluated as conditions change. In practice, the level of public goods supplied will depend entirely on the amount of earmarked revenues and costs, regardless of whether that level has become excessive or deficient. While the usual example cited in this regard is exaggeratedly horrifying (the continued presence in two U.S. states during the mid 1960s of taxes earmarked for Confederate pensions), most would agree that rigidity in earmarking provisions is

Figure 3

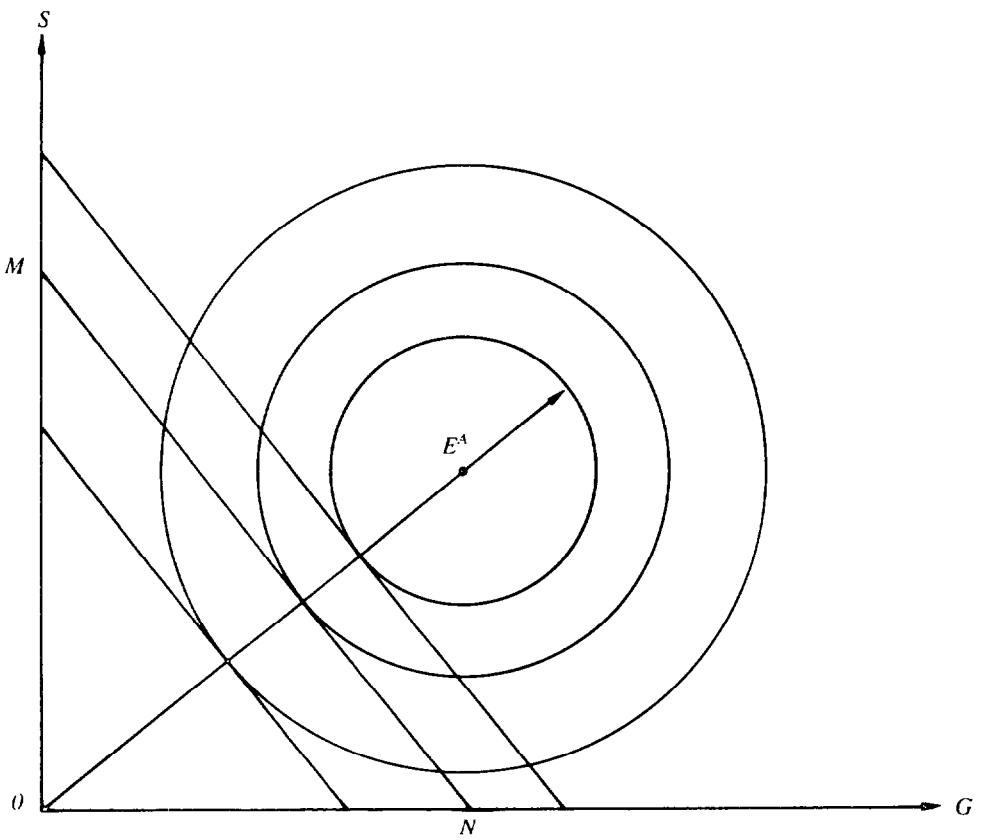

Figure 4

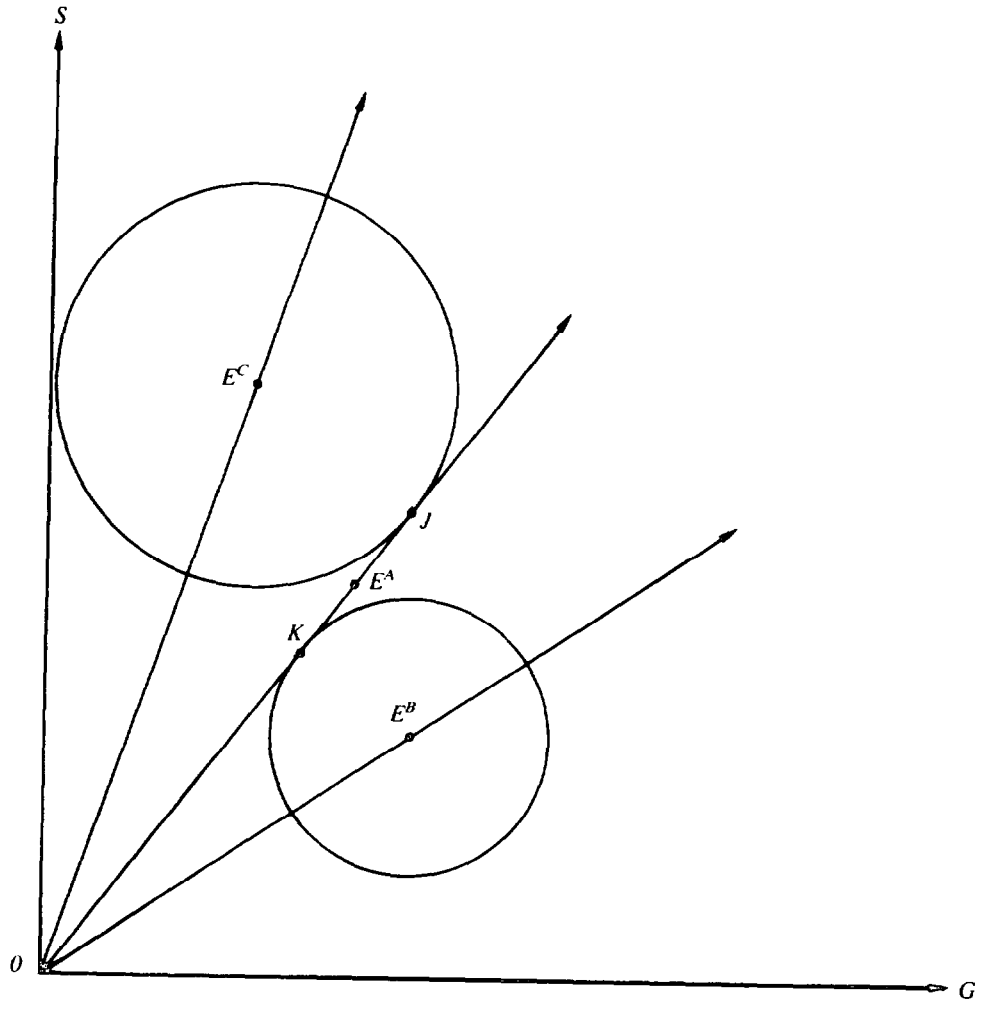

Figure 5

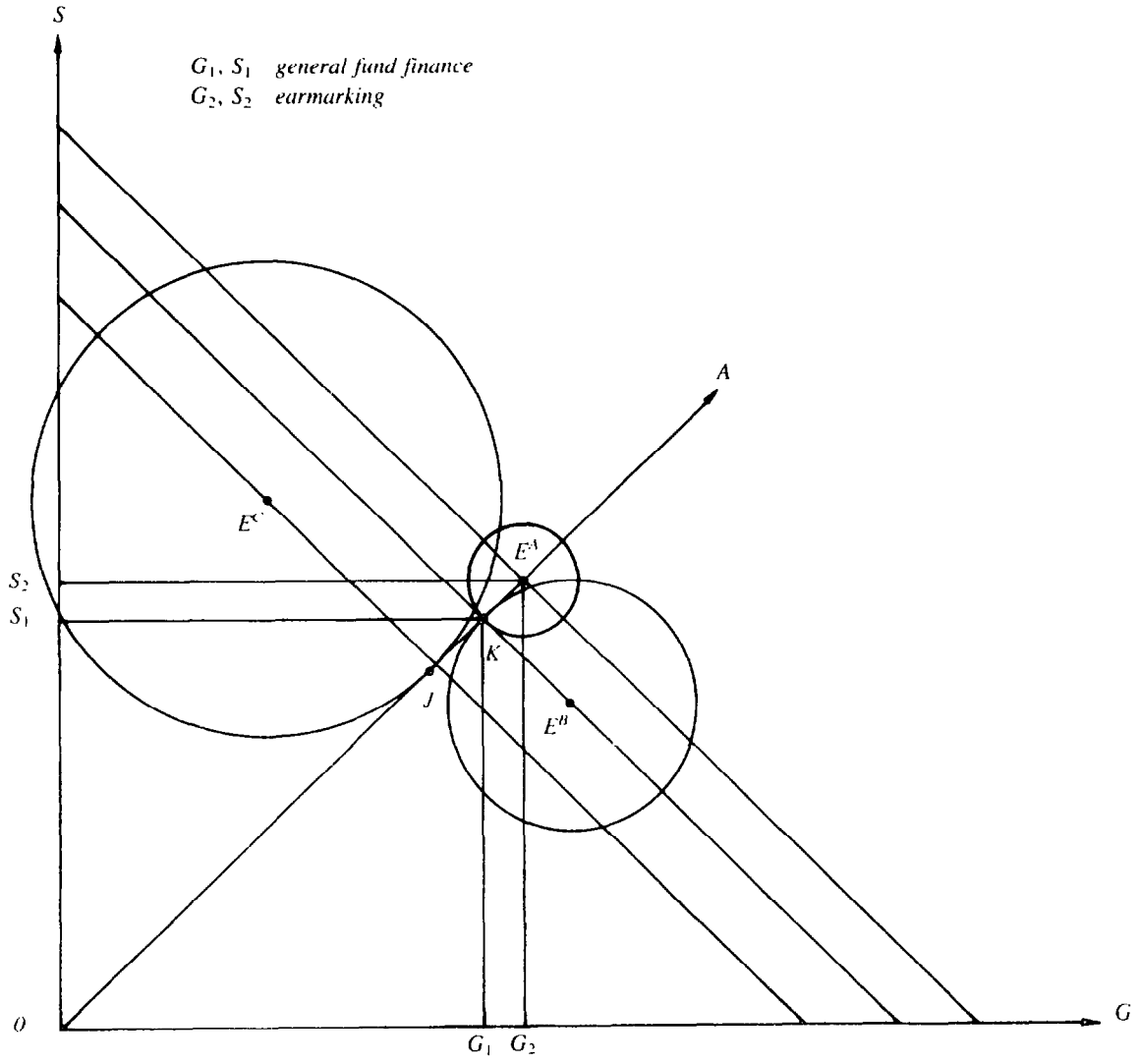
S
G_1, S_1 general fund finance
G_2, S_2 earmarking
A
E^C
E^A
S_2
S_1
K
J
E^B
0
G_1
G_2
G

Figure 6

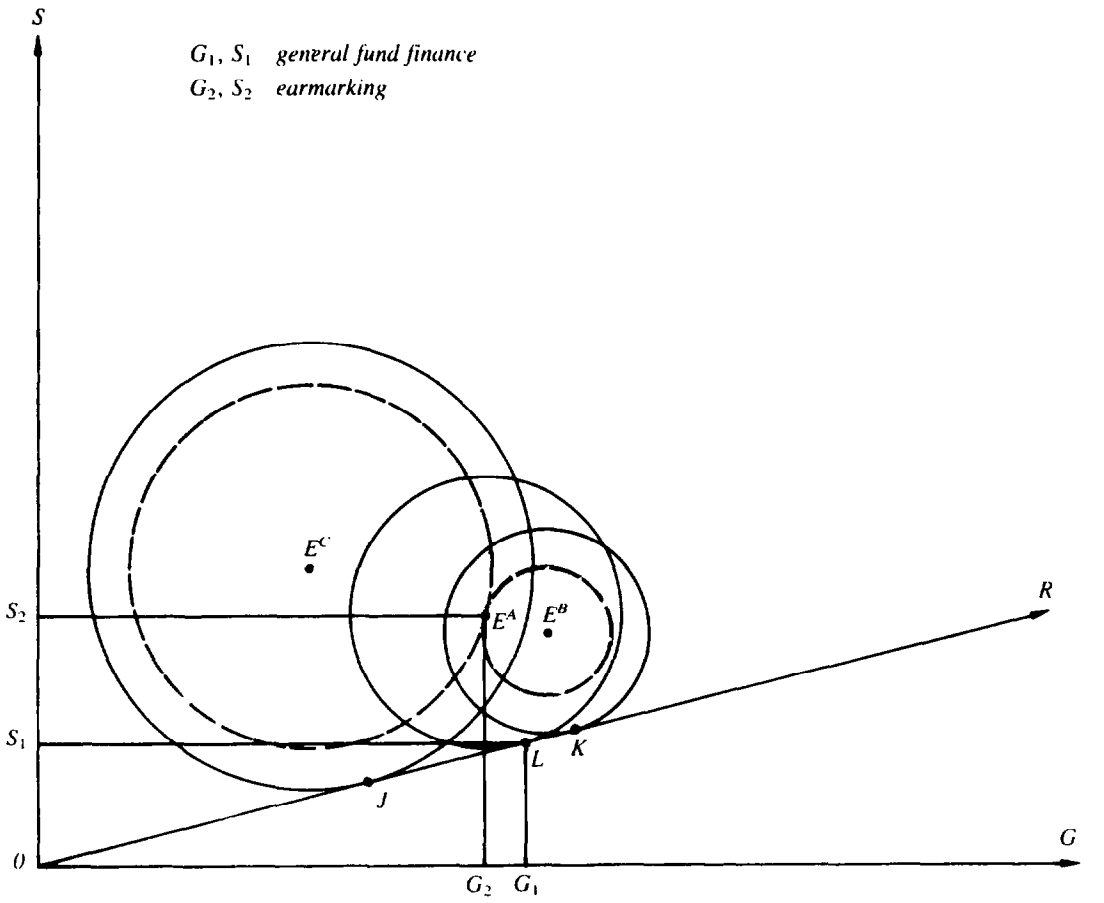
S
G_1, S_1 general fund finance
G_2, S_2 earmarking
E^C
E^A
E^B
R
S_2
S_1
K
L
J
0
G
G_2
G_1

Figure 7

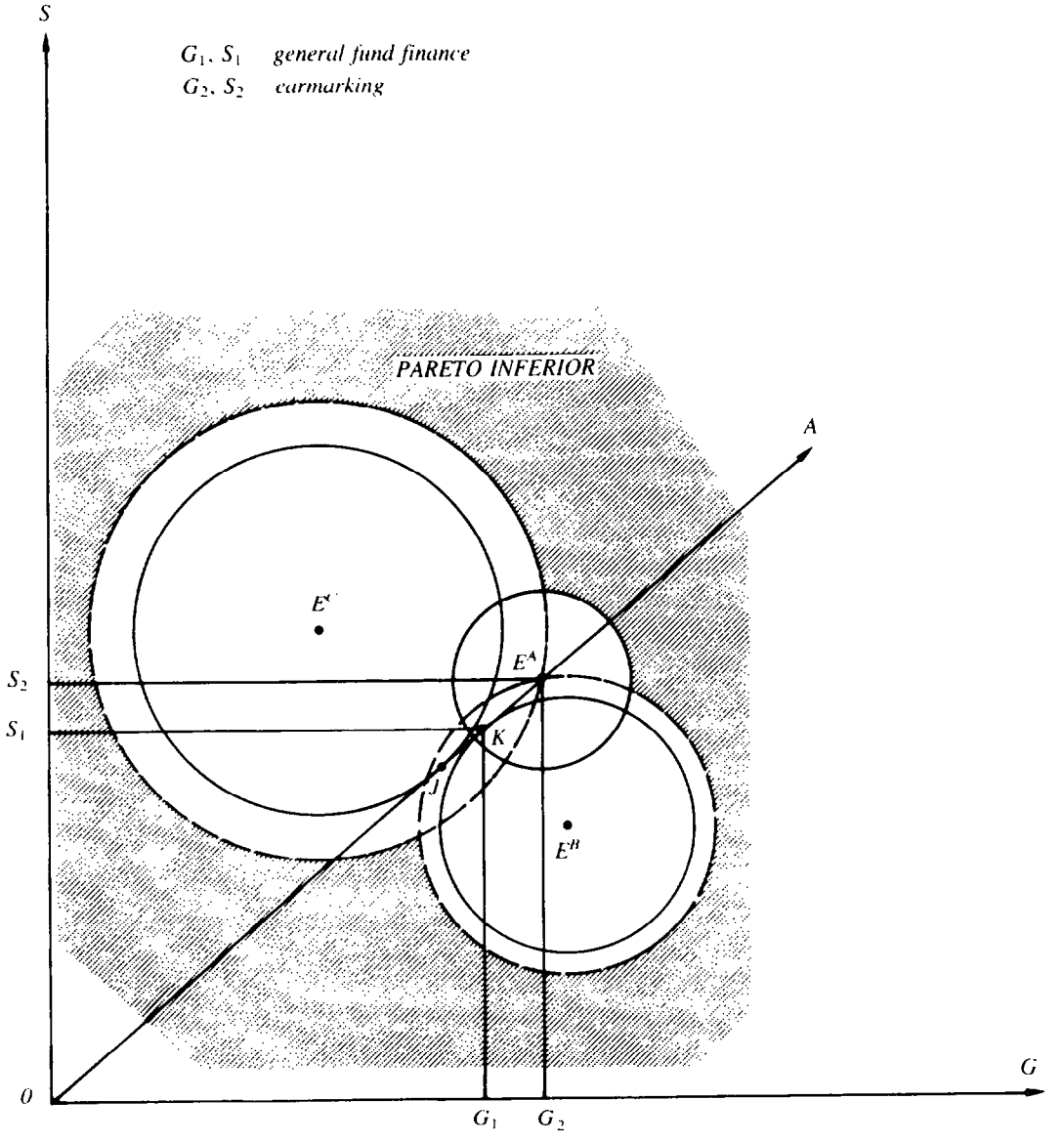
S
G_1, S_1 general fund finance
G_2, S_2 earmarking
PARETO INFERIOR
A
E^C
E^A
S_2
S_1
K
J
E^B
G
0
G_1
G_2

Figure 8

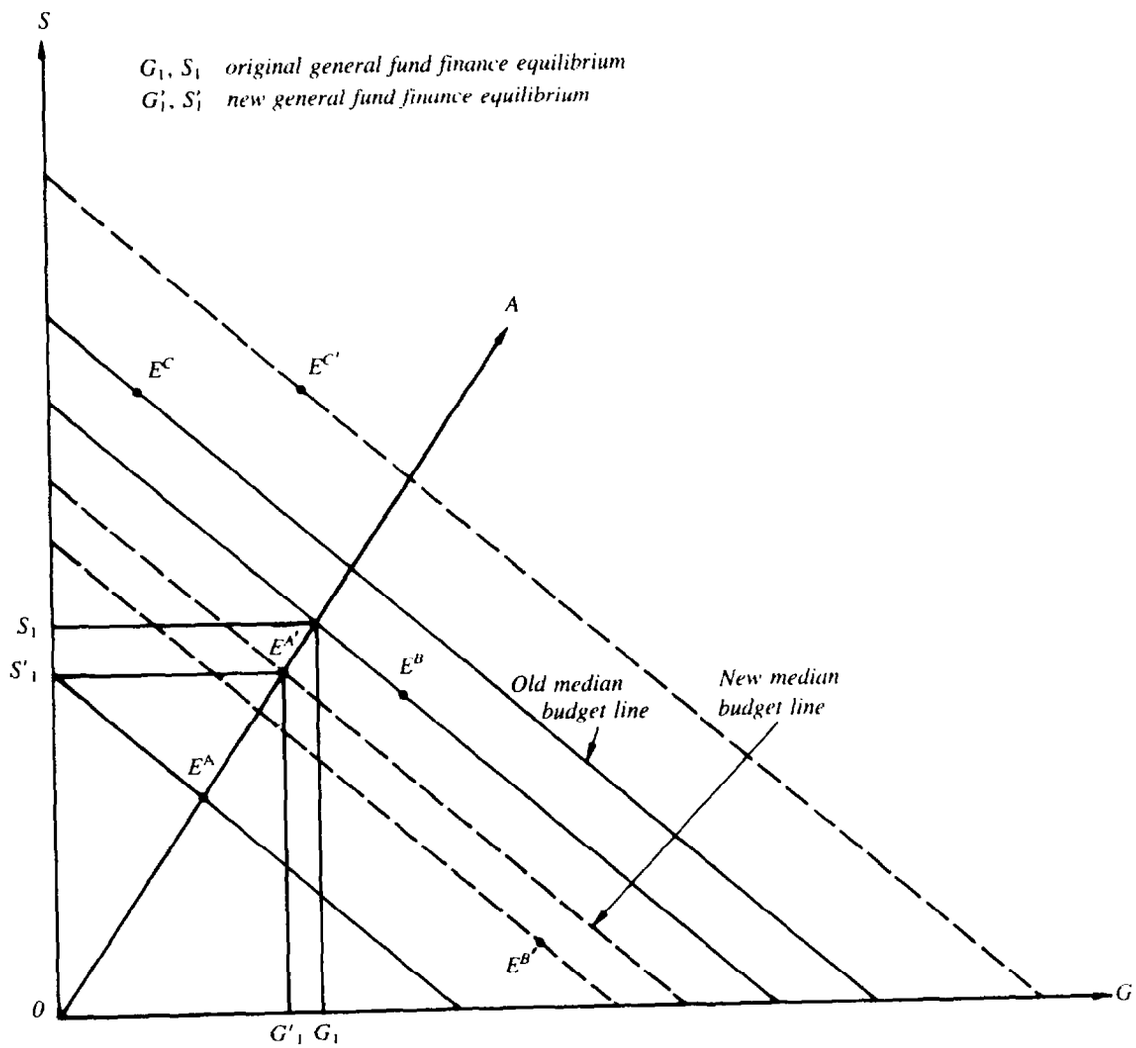
S
G_1, S_1 original general fund finance equilibrium
G'_1, S'_1 new general fund finance equilibrium
A
E^C
$E^{C'}$
S_1
S'_1
$E^{A'}$
E^B
Old median budget line
New median budget line
E^A
$E^{B'}$
0
G'_1 G_1
G

the ultimate flaw in the concept. The moral, then, is that such provisions should be mandatorily reviewed at regular intervals whenever their introduction becomes inevitable.

3. The benefits principle of taxation and the economics of user charges

Frequently, the use of earmarked taxation is justified by invoking the "benefits principle of taxation," which argues that taxes should be borne by those who most benefit from the associated expenditure. The notion is appealing to economists because it parallels the market mechanism for private goods. The analogy makes most sense when an impure public good is characterized by excludability in consumption. Then it becomes possible to finance the activity with a user charge. Although user charges are in a sense "earmarked" to their associated activity, the implementation of a user charge is not equivalent to an earmarked tax in terms of efficiency and equity. When the implementation of user charges is judged to be administratively infeasible or too costly, an earmarked tax can be used as a second-best instrument of finance (e.g., a gasoline tax as a proxy for charges on highway users). In this case, it is essential that the base of the earmarked tax bear some relation to the level of public consumption.

The simple economics of user charges sheds some light on the principles that determine the extent of revenues to be earmarked. Consider the provision of an excludable public good characterized by positive externalities. In Figure 9, the marginal social benefit (MSB) from a unit of consumption exceeds the corresponding private benefit (MPB). The marginal cost of production (MCP) is, for simplicity, assumed to be constant at p_1. The optimal level of consumption for society is q^*, for which consumers are willing to pay only p_2. Then q^*, can be publicly provided by a user charge of p_2, together with a per unit subsidy of $(p_1 - p_2)$. The subsidy will have to come from the government's general fund rather than from direct consumers. Financing should come entirely from general funds only if social benefits are so large as to imply a user charge so low that it would barely cover the added costs of collection.

It is possible that owing to price distortions in the economy the financial cost of implementing user charges may diverge from the social opportunity cost of employing these resources elsewhere. The opportunity cost of using experienced managers and accountants may be extremely high in developing countries. It may make sense in such a circumstance to earmark revenues from an easily administered tax base that varies positively with the level of public good consumption, for example, gasoline tax revenues for highway construction and maintenance. Ideally, earmarked revenues should total p_2q^*, while the remainder, $(p_1 - p_2)q^*$ is financed by general revenues unrelated to the level of consumption of the good. In fact, this is precisely how expenditure on road construction and maintenance is financed in a number

of countries. Eklund (1972) reports that, for a cross section of countries with earmarking provisions, an average of 63 percent of all road expenditure was financed out of the general fund.

4. Bureaucracy versus the legislature

A somewhat more institutionalist perspective on earmarking may be gained by pursuing in greater detail--as Niskanen (1971) has--the question of who precisely supplies public goods and services. While demand for public goods is expressed and resolved in the legislature, public goods are generally supplied by bureaucracies. According to one view, the distinguishing characteristic of a bureaucracy is the absence of external control on efficiency and weak internal incentives. Weak external control results from the ambiguous nature of a bureaucracy's output 1/ and the dependence of the legislature on the bureaucracy for information. Weak internal incentives to produce efficiently are a consequence of an absence of financial incentives for managers and a lack of competition in the market for their final output. The effect of this constellation of circumstances is to make bureaucrats pursue goals other than efficiency, such as larger staff establishments, prestige, and patronage. As most of these are positively related to the size of the budget, Niskanen analyzed the behavior of bureaucracies in terms of the budget-maximizing bureaucrat, who is in a bilateral monopoly position with the legislature.

This approach to bureaucratic behavior can be used to rationalize the legislative tactic of earmarking revenues for specific end uses. Numerous expenditures exist that are clearly in the public interest, but which bureaucracies may have little interest in pursuing adequately. A good example is expenditure on operations and maintenance of public structures and capital. The prestige-maximizing bureaucrat generally prefers to see his department's allocation go to new and high-profile investment and construction projects rather than to something as mundane as maintaining an old road or irrigation ditch. While it is true that bureaucratic reputation may depreciate along with public structures, the process is long and managers are rarely stationary targets. As proper maintenance of the capital stock is in many countries an urgent issue, the legislature (or the executive branch) may force the bureaucracy's hand on the matter by earmarking funds for maintenance expenditures.

5. Earmarking and intertemporal horsetrading

Earmarked revenues can also serve to enforce long-term deals between legislators, and in the process be welfare enhancing. Consider the case of the U.S. Hazardous Substance Response Fund (or "Superfund"), which obtains revenue from excise taxes on petroleum and chemicals and

---

1/ For example, the Ministry of Defense produces an amalgalm of soldiers, guns, ships, and aircraft from which the final output of interest to the consumer--defense services--must be inferred.

Figure 9

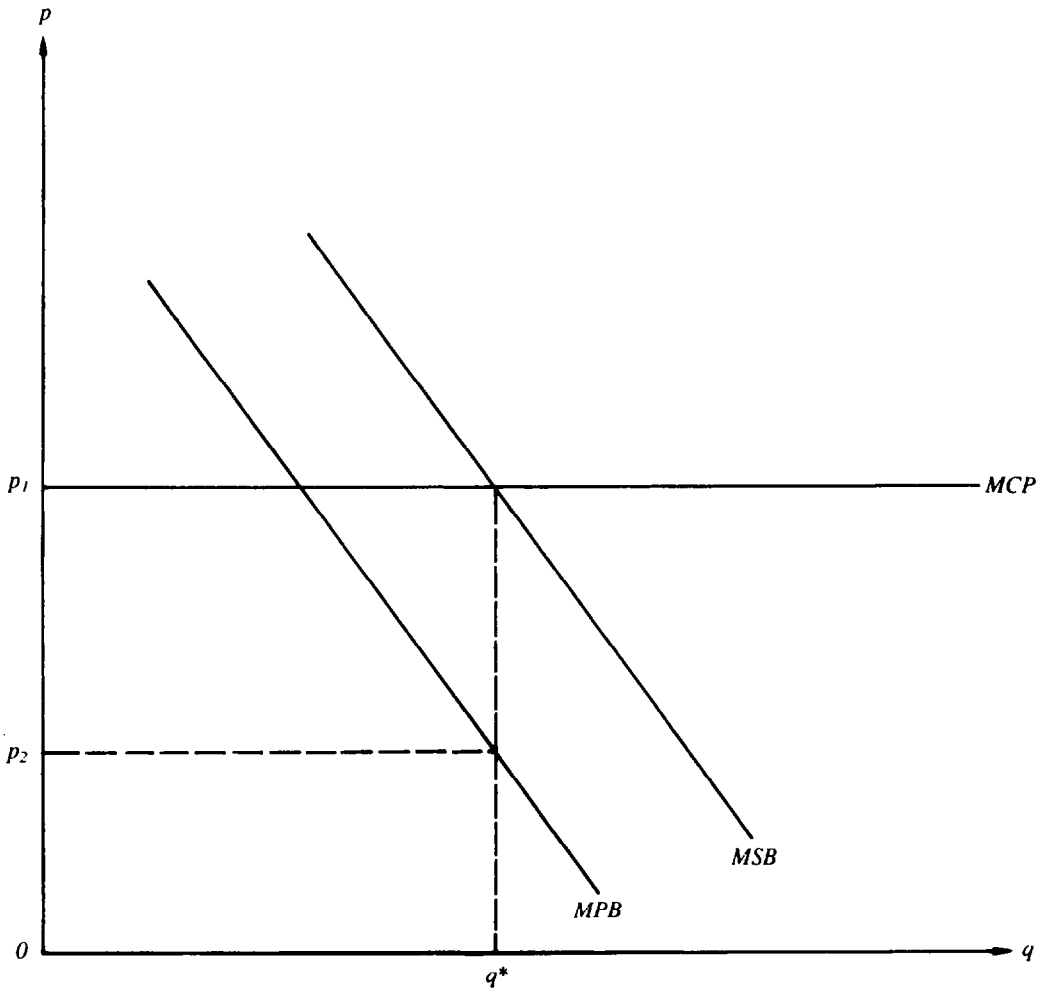

uses the proceeds to help clean up environmental damage caused by their production and disposal. 1/ While taxing the chemical industry as a whole can be rationalized as a crude approximation to the "polluter-must-pay" principle, one can still question the validity of earmarking the proceeds to a special fund. Why should such revenues not be assigned too--and expenditures be met from--the general fund?

Consider now the following explanation. The ex ante probability of discovering a toxic waste dump is roughly the same across the country. However, ex post, a legislator from Nevada has no incentive to approve cleanup expenditures in New York (because it is a pure income transfer), unless the legislator from New York can assure reciprocal support in the event of a similar disaster in Nevada at some future date. But legislators from New York cannot bind their successors to such promises. A way out of this impasse is to earmark revenues for a special fund whose expenditures do not require legislative approval. Such a one-time agreement enforces mutual promises through time and, in this instance, permits the introduction of a welfare-enhancing public activity.

It is interesting to note that the Superfund may not be used to clean up oil spills (even in the unlikely event that the perpetrator cannot be identified). This can be explained by the fact that the ex ante probability of an oil spill is not uniform across states. Only coastal states are concerned, and legislators from the interior of the United States will naturally oppose a long-term commitment (i.e., an earmarked fund) for such purposes.

The role of earmarking in enforcing commitments between legislators can be extended to a number of situations. Eklund (1969), for instance, points out that in fractionalistic societies with unstable majority coalitions, earmarking may be the only way in which new expenditure

---

1/ Jankowski (1984) has suggested that the Superfund is essentially a Pigovian tax. This is not correct because the supporting taxes are not intended to influence the current flow of pollution, but rather to clean up the stock of past environmental damage perpetrated by unknown or insolvent parties. Moreover, a single instrument such as the Pigovian tax on the level of effluence would be socially inoptimal for dealing with two issues (the cleanup of existing toxic waste and the appropriate level of future effluence).

decisions can be agreed upon. In the absence of such a provision, society will tend toward the status quo, in the process forgoing public projects with a high return to society. 1/

While the rule enforcing aspect of earmarking enhances welfare in these cases, the opposite may also occur in practice. Special interest groups may want to earmark specific taxes as a means of limiting their tax burden. The petroleum industry, for example, may lobby for earmarking any gasoline tax for highway maintenance, if they suspect that there is limited scope for expansion of this activity. Similarly, firearms manufacturers would attempt to earmark taxes levied on their industry for a complementary activity such as maintenance of wildlife.

6. Other arguments

One justification for earmarking taxes concerns the deleterious effects of erratic financing. Revenue flows can be very unstable over the life of large public sector projects, resulting in costly idling of heavy machinery over extended periods of time for want of timely and adequate funding. Earmarking receipts from a stable revenue base is a means of protecting socially important projects from the exigencies of a budgetary crunch and can, over time, be an important cost-saving device for the public sector. In terms of Figure 9, the cost schedule MCP is lowered when steady finance is made available through earmarked taxes. While earmarking serves as a constraint on budgetary flexibility, it is nevertheless argued that the inflexibility in the overall size of the budget is welfare enhancing because there are offsetting savings in costs. It is precisely this sort of consideration that has prompted the World Bank to attach earmarking clauses to project finance in several developing countries.

Another justification for earmarking taxes is that in a number of developing countries, where democratic institutions are weak and mistrust of the government is high, earmarked taxation can improve tax compliance. If the public can be assured that taxes will be spent in their locality rather than, say, used to indulge a strongman's penchant for military expansion, they will be more willing to comply with existing taxes. In this case, earmarking substitutes for lack of representative power in the executive and legislative branches of government.

1/ Legislators are not the only class that may resort to earmarking in such a circumstance. Wilkie (1974) and Premchand (1983) suggest that, in a number of Latin American countries, earmarking was motivated by the executive branch of government, which wanted to bypass the problem posed by legislative logrolling and unstable coalitions.

Third, earmarked taxes and user charges can play an important part in promoting economic stability. Consider for example the case of a developing country that is reliant on export taxes. An exogenous decline in export proceeds would not only adversely affect the export sector but also entail cutbacks in development spending. If spending was not reduced accordingly, the alternatives--given monetary policies--are, of course, a deterioration in the balance of payments and inflation. To the extent that the tax bases underlying earmarked funds are more stable than trade taxes--user charges for roads and water may be expected to be so--macroeconomic stability may be enhanced by using certain earmarked taxes.

Fourth, many countries have in recent years been unable to muster the political will to make painful (but necessary) fiscal adjustments in the face of serious external shocks. In a number of cases, the brunt of fiscal adjustment has been borne entirely by capital and infrastructural expenditure with minimal reduction of current expenditures. While the distinction between current and development expenditure should not be exaggerated--underfunding of the recurrent costs of development expenditure is a long-standing problem in developing countries--there is a tendency to cut back on vital infrastructural and maintenance expenditures rather than on public sector employment and wages. An earmarking clause, designed to protect vital projects and expenditures, would strengthen the government's hand in reducing less socially productive components of public expenditure.

7. Summary

The normative case for earmarked taxes rests fundamentally on the assumption that groups and individuals in society have different preferences. Earmarking provides voters an opportunity to reveal their preferences for public goods with their tax dollars. This is similar to the mechanism in private markets where individuals reveal their preference for potatoes with outlays earmarked for the production of potatoes. 1/ Earmarking may be loosely thought of as an application of the benefits principle of taxation since, as in private markets, taxes are paid according to perceived benefits. This is readily seen in cases where excludability in consumption is feasible, but is difficult to implement when it is not.

The analogy with private markets also breaks down when we descend into the real world of majority voting in legislatures. However, we did derive the important lesson in Section II.2 that one cannot, in general, make a welfare comparison between earmarking and general fund finance since there are gainers and losers under both regimes; public choice theory provides only a positive analysis of earmarking. The possibility

---

1/ Whether or not the underlying distribution of income is "just" is, of course, a separate issue.

of perverse outcomes under general fund financing--such as a decline in the provision of a public good even when there is a unanimous increase in public preference for that good--is one argument against that system.

The role of earmarking as a rule-enforcing device was also noted in the context of conflict of interest with the bureaucracy as well as in facilitating a welfare-enhancing provision of public goods across time. Finally, it was noted that earmarking may improve both the composition of public expenditure and the stability of the budget deficit in developing countries.

With the exception of Lindahl's theory, most normative arguments support earmarking for specific goods and services rather than advocate full-scale earmarking for all public expenditures. As a practical matter too, it is important to examine instances of earmarking individually, since our positive analysis revealed that it may arise from a number of welfare-reducing causes such as rent seeking or tax avoidance by special interest groups.

III. The Case Against Earmarking

The case against earmarking is best summarized by Deran (1965):

(a) Earmarking hampers effective budgetary control.
(b) Earmarking leads to a misallocation of funds, giving excess revenues to some functions while others are undersupported.
(c) Earmarking imparts inflexibility to the revenue structure, with the result that legislatures are hard put to make suitable adjustments when conditions change.
(d) Earmarking provisions often remain in force long after the need for which they were established has vanished.
(e) By removing a portion of fiscal action from periodic review and control, earmarking infringes on the policymaking powers of state executives and legislatures.

Such criticisms derive from a particular outlook on public finance: that of the benevolent social planner attempting to maximize a well-defined social welfare function. However, the essence of the theoretical arguments for earmarking derived from a completely different view of society: one where voters with differing preferences attempt to arrive at a consensus (or at least a simple majority) to support alternative public expenditures. Thus any evaluation of earmarking should include a judgment about the appropriate model of social choice.

Even if one accepts the benevolent social planner approach, other difficulties remain. The arguments against earmarking implicitly assume that the alternative of general fund finance will eliminate the problems associated with earmarking. Points (b)-(e) imply, for instance, that expenditures under general fund financing are indeed periodically reviewed and adjusted to ensure that no program is under- or over-

provided for. The empirical basis for such an assertion is highly questionable. Most budgeting under general fund financing occurs incrementally rather than by a procedure that evaluates each tax and expenditure afresh from year to year. Clearly then, any rejection of earmarking should verify whether the public sector is indeed capable of delivering a superior result without earmarking.

Finally, the extent to which earmarking leads to rigidity in the budget should be ascertained. Many, like Premchand (1983), would argue that it is not earmarking per se, but rather its prevalence that is the key issue. Although widespread earmarking may induce rigidities in the budget, there are ways to reduce this effect. For example, adjustments can be made to the base or the tax rate of an earmarked pool of revenues. Alternatively, an activity can be jointly financed by both earmarked and general fund revenues, the latter providing the latitude necessary to make discretionary changes at the margin.

More fundamentally, one can question whether it is really worth making such a fuss about budget rigidity. Earmarked taxes are an application of the benefits principle of taxation and may be associated with higher revenues. As pointed out by Bird (1984), "it makes little sense to criticize earmarking for budgetary rigidity, since without earmarking, there would be less of a budget to be rigid about."

IV. Earmarking in Practice

No attempt is made here to provide an empirical overview of the extent of earmarking in the world economy or any class of countries. Instead, we limit ourselves to the more modest objective of describing the experience of just one country--Colombia--chosen to illustrate both the beneficial role that can be played by earmarking as well as some of the pitfalls.

The complex nature of the issue makes it very difficult to judge whether a particular regime of earmarking has been a success or a failure. The strategy adopted here involves weighing the potential benefits of earmarking derived in Section II against the costs attributed to it by its detractors. A proper evaluation of the benefits requires that each instance of earmarking be considered, to use a sensible bureaucratic cliché, "on a case-by-case basis." A proper evaluation of the costs requires consideration of the effects of earmarking on budget formulation and overall fiscal policy. The latter requires some judgment whether the extent of earmarking has reached the point where there is little room for maneuver in adjusting fiscal policies to changing circumstances.

Earmarking is extensive in Colombia. 1/ A conservative estimate--which excludes a number of smaller earmarked taxes, as well as the retained profits of public enterprises--indicates that earmarked taxes accounted for about 45 percent of total tax revenue in 1978. Table 1 provides a partial listing of major taxes and the expenditures for which they were earmarked. In fact, the practice of earmarking is a great deal more complex than suggested by this table, as there are numerous instances of convoluted two-tier and three-tier earmarking, where an agency receiving the proceeds of a tax is required to earmark a certain fraction of the receipts for another agency or enterprise.

Coffee taxes. The largest class of earmarked taxes in Colombia are coffee taxes. A number of taxes are levied on coffee exports and a considerable percentage of the proceeds are earmarked for the National Coffee Fund. The organizations of growers comprising the Coffee Fund utilize these resources to finance various activities. Some of these expenditures can be justified on grounds of benefits taxation. For example, in 1978, the Coffee Fund spent 7 percent of its earmarked receipts on direct benefits to growers by providing important agricultural inputs as well as infrastructure in the form of aquaducts, health, and education in coffee producing areas; in the same year, 60 percent was retained by the Fund as part of its price stabilization activities. Other expenditures have no rationale at all: the Fund spent 33 percent of its receipts in 1978 to subsidize domestic coffee consumption, a questionable use of resources for a developing country.

Overall, given the Fund's surplus and the fact that a considerable portion of expenditure makes little developmental sense, one could argue that the earmarking of coffee taxes is somewhat excessive. Although the Government has already effectively de-earmarked some revenue by forcing the Fund to invest a part of its surplus in government securities, matters could be improved by reducing the amount earmarked for the Coffee Fund.

Payroll taxes. A second major group of earmarked revenues are payroll taxes, which are mostly assigned to various social security institutions. The benefits rationale underlying earmarking is quite clear in these cases. Likewise, a benefits rationale partly applies to the Colombian Family Welfare Institute (ICBF). Among the activities financed by a separate 2 percent payroll tax is the provision of child care services for working couples. However, it is probable that the earmarking provision was also motivated by a previous Government's desire to ensure ICBF's survival in the future by endowing it with a generous and reliable source of revenue.

Earmarked revenues also accrue to a non-social security institution, without any apparent rationale. The Compensation Funds receive the proceeds of a 4 percent payroll tax that is supposed to be earmarked

---

1/ This section draws heavily on Bird (1984).

Table 1. Colombia: Earmarked Taxes, 1978

(In millions of pesos)

Tax	Destination	Amount
Coffee taxes		
Ad valorem export tax	National Coffee Fund, small portion further earmarked for Departmental Committees of Coffee Growers	2,176
Retention tax	National Coffee Fund	15,650
"Pasilla" tax	National Coffee Fund, small portion further earmarked for Departmental Committees of Coffee Growers	370
Payroll taxes		
Various taxes, different rates	National Insurance Fund (CAJANAL) and Communications Workers Social Security Fund (CAPRECOM)	1,749
Three taxes, total rate 13 percent	Colombian Social Security Institute (ISS)	11,343
4 percent tax	Compensation Funds	2,060
2 percent tax	National Apprenticeship Service (SENA)	1,030
2 percent tax	Colombian Family Welfare Institute (ICBF)	1,479
Taxes earmarked for health		
Beer tax	Sectional Health Services (SSS)	513
Liquor taxes	SSS	680
Gambling taxes	SSS, through welfare agencies (85 percent to schools for the blind; 15 percent to National Federation for the Blind	862
Other earmarked taxes		
Tobacco taxes	Sectional Sports Commissions; portion further earmarked	241
Gasoline taxes	National Road Fund, portion further earmarked for National Fund for Neighborhood Roads; departmental roads; traffic departments	5,431
Hotel tax	Colombian Tourist Company (COLTURISMO)	178
Import tax	Export Promotion Fund (PROEXPO)	4,593
Valorization taxes	To valorization offices, for public works	994
Property tax surcharge	Regional Corporations	369
Earmarked transfers		
Tax allowance	Departments and national territories and Special District of Bogotá; 74 percent dedicated to education and 26 percent dedicated to health	9,900
Sales tax transfer	30 percent of sales tax receipts granted to departments and municipalities; a large percentage is dedicated to education	1,551
Total Earmarked Taxes		61,169
Total Tax Revenue		132,269

Source: Bird, Richard M., Intergovernmental Finance in Colombia, Final Report of the Mission on Intergovernmental Finance (Cambridge: Harvard Law School, 1984), Table 5-1; and Colombia: Recent Economic Developments, 1984.

toward payment of a family subsidy to the workers of participating firms. However, about half the proceeds have instead been financing the construction of luxury resorts run by the Funds. To the extent that most contributors are unable to utilize these subsidized facilities, this otherwise productive and easily administered tax has no benefits aspect.

Earmarking for health. Although some sources, such as taxes on beer and liquor, do have some tenuous links with ill health, a good deal of financing for health (from taxes on gambling) has no benefits rationale. Because "vice taxes" are heavily and successfully taxed in many countries without resort to earmarking provisions, it is unlikely that they have increased total revenues in Colombia. Consequently, the true role of earmarking lies in assuring the health sector a minimum level of resources. It is difficult to judge a situation like this because there is no way of knowing whether the alternative would involve wasteful forms of military expenditure or more efficient development expenditure. The main challenge lies more in verifying whether revenues earmarked for specific programs (such as schools for the blind) are appropriate.

Other earmarked taxes. Except for taxes on tobacco, which are earmarked for sports and cultural institutions, most other taxes can be rationalized on grounds of benefits with varying degrees of plausibility. The strongest case may be made for the valorization tax levied on property values benefiting from public works. Bird (1984) approvingly notes that:

> "...it has been more successful in Colombia, particularly in some Colombian cities, than almost anywhere in the world. In the various studies that have been made of the valorization tax, it has been suggested that a principal reason why that tax is acceptable is precisely that those who have to pay it perceive a relationship between the tax and the benefits that they expect to receive from the public works that it finances."

The weakest case is that of an import surcharge earmarked for the export promotion council, PROEXPO. 1/ The argument that exporters should be subsidized by importers, because "exporters earn the foreign exchange that permit imports," is artificial. Most likely, the arrangement simply reflects the political power of exporters at the time PROEXPO was set up, and the Government's belief that an indirect tax in the form of an import surcharge would slip through the legislature much more readily than, say, higher income taxes.

1/ This case is not far removed from the suggestion of the U.S. auto industry some years ago to dedicate tariff revenues to "improving productivity" in the auto industry.

Earmarked transfers. Transfers from higher levels of government often reflect a revenue-sharing scheme between different levels of government and, as such, should not be considered a form of earmarking. However, in Colombia, the law enjoins regional governments that receive such funds to devote 74 percent of the transfer to current expenditure for primary education and 26 percent to current health expenditure. Presumably, the intent of the provision is to insulate and increase total public expenditure on these functions. A recent empirical analysis by Slack and Bird (1983) suggests that such tied transfers have, in fact, had the opposite effect: regions effectively used the transfers to replace locally financed health and education expenditure. This highlights the importance of carefully designing earmarking schemes that are intended to promote (or protect) particular expenditures. The promotion of health and education expenditure may have been better served by an open-ended matching grant. 1/

What can be concluded from this somewhat elliptic summary of earmarking in Colombia? It would be difficult to argue that earmarking is so excessive that it imposes significant constraints on efficient budgeting and budget flexibility. In fact, Bird (1983) asserts that it is the other way around, that earmarking is largely a reflection of poor budgeting and expenditure control practices:

> "The structure and operation of the present budgetary and expenditure system in Colombia are such as to make it extremely difficult to spend resources efficiently. Indeed, the cumbersomeness and unreliability of this system are among the principal reasons for the marked growth of the decentralized sector and of earmarked revenues that have characterized the Colombian public sector in recent years.... Until such changes are made, it is simply utopian to expect anyone to give up the hard-won defensive positions that have been erected in such forms as earmarked revenues and autonomous organizations, in large part as bulwarks against the perceived inefficiency of the present expenditure system."

Although earmarking in Colombia may be viewed partly as a flight from inefficiency, this is not to suggest that the system of earmarking does not need substantial reform. It was noted that some earmarked revenues were excessive, as in the case of earmarked coffee taxes that subsidize domestic coffee consumption. In such instances, a larger fraction could be retained in the general fund. Another example involves the earmarking of 10 percent of expenditures for the judiciary. More generally, there is clearly a need to review periodically all earmarking provisions and to verify whether funding for each activity adequately reflects changing circumstances and priorities.

1/ A matching grant provides x pesos for each peso raised locally. An open-ended grant does not set a ceiling on the size of the transfer.

V. Concluding Remarks

Having examined the case for earmarking, as well as some of the difficulties associated with its implementation, we conclude with some thoughts on the circumstances under which earmarking can be recommended.

Since the primary function of earmarking lies in facilitating the expression and resolution of differing preferences, earmarking has its greatest potential in pluralistic societies with strong democratic institutions. However, even in democracies with a broad consensus on most issues, the legislature may need to guard itself from encroachment by the military; an earmarking device that protects important social and economic expenditures can play a useful role in this respect.

It often happens that the only way a legislature can agree upon supporting a vital social activity is by decentralizing it and removing it from routine legislative consideration. A good example of this is the U.S. Superfund. Earmarking should be permitted when the alternative would be to forgo an activity that may broadly be deemed in the national interest.

The usefulness of earmarking is not limited to societies with active legislatures. It was noted earlier that earmarking rules may be needed to force a bureaucracy into activities that it has few incentives to pursue, such as, expenditure on operations and maintenance. More fundamentally, an earmarked tax can also be recommended when it is a benefits tax or a substitute for a user charge. Benefit taxation is not only appealing in terms of equity but is likely to meet with greater public compliance. This argument would apply to a great many activities where the beneficiaries are readily identified, for example, local services such as fire protection or small public works projects. Earmarking for such purposes does not preclude supplementary financing from general revenues, insofar as the government may also have redistributive motives. In fact, supplementary financing from general funds allows policymakers to make discretionary changes at the margin, thus reducing the rigidities associated with earmarking.

The circumstances sketched above are far from exhaustive but do convey the general flavor of the case for earmarking. At the risk of stating the obvious, one should bear in mind that earmarking provisions may become obsolete and counterproductive as times change; hence they should be mandatorily reviewed at regular intervals of about five years. Also, the extent of earmarking should be limited to allow governments some latitude in adjusting to various shocks and exigencies as they arise.

References

Bird, R.M., "Budgeting and Expenditure Control in Colombia," Public Budgeting and Finance (Autumn 1982).

_____, Intergovernmental Finance in Colombia: Final Report of the Mission on Intergovernmental Finance, (Harvard University Law School, 1984), pp. 87-115.

Browning, E.K., "Collective Choice and General Fund Financing," Journal of Political Economy (April 1975).

Buchanan, J.M., "The Economics of Earmarked Taxes," Journal of Political Economy, (October 1963).

Deran, E., "Earmarking and Expenditures: A Survey and a New Test," National Tax Journal, (December 1965).

Eklund, P., "Taxation and Earmarking," (mimeo, World Bank, 1969).

_____, "A Theory of Earmarking Appraised," National Tax Journal, (June 1972).

Goode, R., "Government Finance in Developing Countries," (Washington: The Brookings Institution, 1984), pp. 11-13.

Jankowski, J.E., Jr., "The Practice and Prevalence of Earmarking," (National Tax Association, Tax Institute of America Proceedings, 1984).

Johansen, L., "Some Notes on the Lindahl Theory of Determination of Public Expenditures," International Economic Review (September 1963).

Mueller, D.C., Public Choice (Cambridge University Press, 1979), pp. 68-89.

Niskanen, W.A., Jr., Bureaucracy and Representative Government (Aldine Atherton, 1971).

Premchand, A., Government Budgeting and Expenditure Controls: Theory and Practice (Washington: International Monetary Fund, 1983), pp. 158-60.

Slack, N.E., and R.M. Bird, "Local Response to Intergovernmental Fiscal Transfers: The Case of Colombia," Public Finance (No. 3, 1983).

Wilkie, J.W., "The Budgetary Dilemma in the Economic Development of Mexico, Bolivia, and Costa Rica" in Fiscal Policy for Industrialization and Development in Latin America, ed. by D.T. Geithman (University of Florida Press, 1974).