DM/85/66

INTERNATIONAL MONETARY FUND

Fiscal Affairs Department

Taxation of International Tourism in Developing Countries 1/

Prepared by Charles Y. Mansfield

Approved by Ved P. Gandhi

October 21, 1985

Contents | Page

1/ The author is indebted to David Nellor, Ved Gandhi, Milka Casanegra de Jantscher and Vito Tanzi for helpful comments.

Contents | Page

Figures

I. Introduction

The emergence of international tourism as a significant economic activity has had striking consequences for a number of industrialized and developing countries. While tourism as a leisure occupation can be traced to ancient times, international mass tourism is a recent phenomenon that began with the introduction of commercial jet passenger service in the late 1950s. By the mid-1960s international tourism had begun to expand rapidly in developing countries. As air travel reduced transportation costs on the supply side, rising incomes and the widespread practice of paid vacations in industrial countries helped create a mass demand for international travel. Data on international tourism illustrate its rapid growth. By 1982, international tourist arrivals had risen to 280 million from 25 million in 1950. International tourist receipts, for which comprehensive data are available for more recent periods, rose from $18 billion in 1970 to $100 billion in 1982. Arrivals in developing countries had grown to 50 million in 1982--up from 18 million just 12 years earlier. Tourist receipts in developing countries during the same period grew from $2.8 billion to $17 billion (Table 1). Clearly, international tourism is a growth industry in which developing countries have shared. For some, in fact, tourism has become a prominent source of foreign exchange earnings and contributes substantially to gross domestic product (GDP).

An initial unquestioning advocacy of tourist development has changed, as critics are asking whether the benefits of tourism outweigh its costs, both on economic and broader social and political grounds. While economic analysis of tourism has centered on its costs and benefits to the economy as a whole, little work has been done on the impact of tourism on public finances, and particularly on taxation of tourism.

This paper will first examine characteristics of the tourist market --a topic that bears heavily on questions such as whether tourism should be taxed and how much. Some peculiarities of tourism as a potential tax base will also be considered. Within this framework, the paper will examine the actual tax practices of a sample of developing countries that rely heavily on tourism. Before proceeding it would be useful to define that part of taxation of tourism to be treated in this paper. Tourism, like any other economic activity, generates factor incomes (e.g., wages of hotel employees and profits of hotels) on which direct taxes can be levied. Tourism may also cause the value of real estate or other assets to appreciate. Such gains can be subject to property or wealth taxes or license fees. Tourism also yields revenue from indirect taxes such as customs duties and sales taxes levied on tourist sector inputs and on goods and services that tourists buy. Finally, tourist spending has a multiplier impact--tourist spending generates successive rounds of income, some of which is taxed by government.

Table 1. International Tourism: Arrivals and Receipts

Year	International Tourist Arrivals	Arrivals to Developing Countries	International Tourist Receipts 1/	International Tourist Receipts of Developing Countries	Percentage Share of Developing Countries
	(In millions)		(In billions of US$)		
1950	25.3	--	--		
1960	69.3	--	--		
1970	159.7	18.0	17.9	2.8	15.6
1971	172.2	20.1	20.9	3.1	14.8
1972	182.4	24.1	24.8	4.2	16.9
1973	191.3	25.4	31.3	5.5	17.6
1974	197.8	27.5	34.1	6.5	19.1
1975	215.1	27.8	38.6	6.7	17.4
1976	221.6	29.8	43.7	7.8	17.8
1977	239.9	31.9	52.4	9.0	17.2
1978	258.1	35.8	68.8	10.9	15.8
1979	268.1	39.3	81.8	13.4	16.4
1980	280.0	47.2	95.3	14.2	14.9
1981	283.6	50.2	96.0	16.0 2/	16.7 2/
1982	279.9	49.6	99.9	16.7	16.7

Sources: International Tourism in Figures, 1970-79, and Economic Review of World Tourism, 1982 and 1984 editions published by World Tourism Organization, Madrid.

1/ Excluding payment for international tourist fares.
2/ 1981-82 estimated in conformity with previous definition of developing countries.

Country data presented in this paper show that taxes on international tourism in developing countries have centered on tourist expenditure, as opposed to direct or indirect taxes on "producers" of tourist services. Estimates of revenue accrued from taxation by multiplier effects of tourist expenditure will not be treated in this paper because the intention is not to deal with the macro impact of the tourist sector. Typically, however, multiplier impacts are substantially reduced by a high propensity to import and because linkages between tourism and the local economy are often weak. 1/

II. The International Tourist Market

International tourism, like mineral or oil deposits, cannot be produced by any economy, but instead depends on an endowment of "touristic" qualities relating to its culture, history, climate, beaches, wildlife, or scenery. For the subgroup of tourist endowed developing countries tourism presents intriguing prospects. In contrast to exports of such commodities as coffee, cocoa or tea, demand for international tourism is perceived to be income elastic (i.e., a growing share of expenditure from high-income countries may be spent on tourism). International tourism has also rebounded from the oil price increases of 1973-74 and 1979-80, implying a price inelastic demand for international tourism. Quantitative estimates of income and price elasticities for foreign travel from major origin countries generally support these intuitive perceptions. In particular, since 1974 sharp fluctuations in exchange rates, in comparative rates of inflation, and in consumer incomes have caused corresponding fluctuations in international travel. These sharp fluctuations have made it easier to measure price and income elasticities for major origin countries. A summary of such measurements indicates that a 1 percent increase in real discretionary incomes results in an increase of between 1 and 1.5 percent in travel abroad, in terms of numbers of travelers or real expenditure. Price elasticity, except in Germany, appears to be generally lower than income elasticity. Typically a 1 percent increase in the relative cost of travel abroad from a particular origin country results in a fall of under 1 percent in travel abroad. 2/

1/ Multiplier estimates and a survey of methodology are found in International Tourism to 1990, Robert Cleverdon and Anthony Edwards, Abt Books, Cambridge, Massachusetts (1982).

2/ International Tourism to 1990, Robert Cleverdon and Anthony Edwards, Abt Books, Cambridge, Massachusetts (1982).

While these estimates apply to foreign travel in general, developing tourist countries represent a small but significant segment of a vast tourist market. The potential international tourist to a developing economy might be thought of as making three sequential decisions: whether to travel domestically or internationally; whether to travel internationally to high-income developed countries (e.g., Europe, Japan, Canada, or United States) or low-income developing country tourist destinations; and, finally, which low-income developing tourist country to choose.

Although statistical estimates of domestic tourism are quite imprecise, there can be no doubt that domestic tourism far surpasses international tourism as an economic activity. The World Tourism Organization in Madrid calculated domestic tourist arrivals at 2.3 billion in 1981 compared with international arrivals of 284 million. The most recent edition of the Economic Review of World Tourism states that "domestic tourism expenditure amounts to between five and ten times international tourist expenditure." 1/ The international tourist, then, is already a marginal participant in a much broader tourist market, and is affected by relative price changes between domestic and international tourism as well as by changes in his own income that lead him to more or less costly destinations. 2/

Turning to the international tourist market itself, data show that international tourism takes place largely among developed countries. Of the $92.5 billion spent worldwide during 1980 on tourism, $14.2 billion, or 15 percent, represents travel to developing countries. (Table 2). Among developed countries, tourist flow is two-way; but in developing countries foreign visitors far outweigh nationals traveling abroad. Countries with high living standards and whose territories are relatively small, such as the Federal Republic of Germany, the United Kingdom, and France, are prototypes of tourist-generating countries. Larger countries with high standards of living, such as the United States and Canada, generate high absolute numbers of international tourists, but complete more closely with their own domestic tourism. In sum, the tourist market for developing countries is a part of a much larger market that includes domestic tourism and tourism among developed countries. Developing tourist economies then compete among themselves for a relatively small fraction of world tourist expenditure.

1/ Economic Review of World Tourism, 1982 and 1984 editions, World Tourism Organizations, Madrid, Spain.

2/ Regression analysis for major origin countries has identified changes in real discretionary income and in the cost of foreign vs. domestic travel as significant variables in explaining travel abroad. See International Tourism to 1990, op. cit., Section V.

Table 2. International Tourism Receipts, 1970-80

(In millions of U.S. dollars and percent)

	1970		1975		1980	
	Tourist receipts	Percent of total	Tourist receipts	Percent of total	Tourist receipts	Percent of total
United States and Canada	3,510	19.7	6,410	16.6	12,765	13.8
Europe	11,200	62.6	24,800	64.2	64,000	69.2
Australia, Japan, and New Zealand	420	2.3	691	1.8	1,572	1.7
Developing countries 1/	2,761	15.4	6,698	17.4	14,162	15.3
Total	17,900	100.0	38,600	100.0	92,500	100.0

Source: International Tourism in Figures, 1970-80; World Tourism Organization, Madrid.

1/ Data on total tourist receipts from developing countries differ from Table 1 because of definitional changes and the use of more preliminary data.

While this view of the tourist market tends to emphasize its competitive nature, several academicians have offered a different view based on a comparison of the market for tourism and the market for export goods. 1/ Indeed, their analysis would appear to have important consequences for tax policy. Tax analysis of traditional exports of developing countries, such as cocoa, tea, or rubber, assumes that these products are part of a largely homogeneous would market in which a single country exports only a small part of the world supply. In such a situation, a tax on the exported good will cut into the profits of home country producers and, in the long run, lead to lower investment and production of the exported good. 2/ In contrast it has been argued that tourism is a more differentiated product, based on the fundamental factor of location in addition to historical, ethnic, and environmental differences. This argument implies that many tourist countries have locational and other advantages that enable them to enjoy a captive market which could be charged a price that includes an element of economic rent. A tourist country of this model would enjoy a loyal captive market and also attract "footloose" visitors who live farther away. For example, the Bahamas, which is located near a high income, tourist-generating country (the United States), in 1983 received 85 percent of its visitors from that country.

While it is difficult on a priori grounds to choose between the competitive and differentiated product models, it is important to note that they have opposite implications for taxation. If a tourist country enjoys a degree of uniqueness in terms of location or other advantage, economic rent will exist and an important objection to the taxation of tourism will be removed. Taxing tourism would then be neutral with respect to the allocation of resources. In the real world one would expect to find a spectrum of tourist economies ranging from very competitive to quite unique. In looking at the possibility of taxing tourism, then, a fundamental point is to gauge the extent to which the country offers a differentiated product.

Without prejudging this issue it is clear that location plays a significant role when a consumer chooses among potential tourist economies, simply because transportation is an important part of the tourist

---

1/ For a summary of academic writings and a conceptual framework of tourism, see Stanley Noval, The Demand for International Tourism and Travel: Theory and Measurement (Xerox University Microfilms, Ann Arbor, Michigan, 1975).

2/ For a complete statement of this view see Richard Goode, Government Finance in Developing Countries, The Brookings Institution, Washington, D.C. (1984), pp. 176-80.

expenditure package. Data on the origin of tourism from "sun and sand" tourist economies, as in the example of the Bahamas above, generally show that most visitors come from a nearby high-income, tourist-generating area. In a simple locational model economic rent would then accrue according to the proximity of the tourist economy. This locational model is difficult to apply to the real world, where tourist economies are not neatly located at varying distances from a high-income, tourist-generating area, and where favorably located tourist economies may compete among themselves. However, the locational model offers a basic insight that, other things being equal, taxation of tourism may be higher the closer the tourist economy is to a high-income, tourist-generating area. Simple locational advantage might then explain the higher rates of taxes on tourism in the Caribbean as a whole, as compared with tourist economies in, say, the South Pacific that are located farther from large, high-income population centers.

In more formal terms this distinction between the competitive and differentiated product views of tourism is shown in Figure 1. In Case 1 the long-run supply curve is level, representing a perfectly competitive tourist market until some point at which the finite supply of sun and sand islands reaches its end. At that point the long-run supply curve turns sharply upward. Given an inelastic demand for tourism, a tax adopted by all tourist economies would raise the price and total receipts from tourism. If one tourist economy alone attempted to raise its price, however, it would be unsuccessful. Case 2 shows an upward sloping long-run supply curve, indicating the existence of economic rent, which is shown in the shaded portion of the diagram. If taxes on tourism are designed to fall on items for which demand is inelastic, such taxes would extract economic rent and could be imposed without changing the price or output of tourism. Most tourist developing economies probably fall into the competitive category, while more unique tourist sites could claim to offer differentiated products.

III. Tax Handles and the Range of Available Taxes on Tourism

On a more practical level, tourism presents an unusual situation with regard to the range of available taxes and the extent to which the potential tax base can be exploited. When taxation of tourism is compared with the taxation of traditional exports, one realizes that both producers and consumers of tourism could be taxed. Unless a country holds a monopoly on a product or has a large market share, only producers (not foreign consumers) of traditional exports can be taxed. In this sense the scope of taxes available to tax tourism is greater. In addition, because tourists are not voting residents the government is not constrained by equity considerations, such as the

FIGURE 1

TOURIST TAX APPLIED WITH AND WITHOUT ECONOMIC RENT

Case 1. IMPACT OF TAX IN COMPETITIVE MARKET

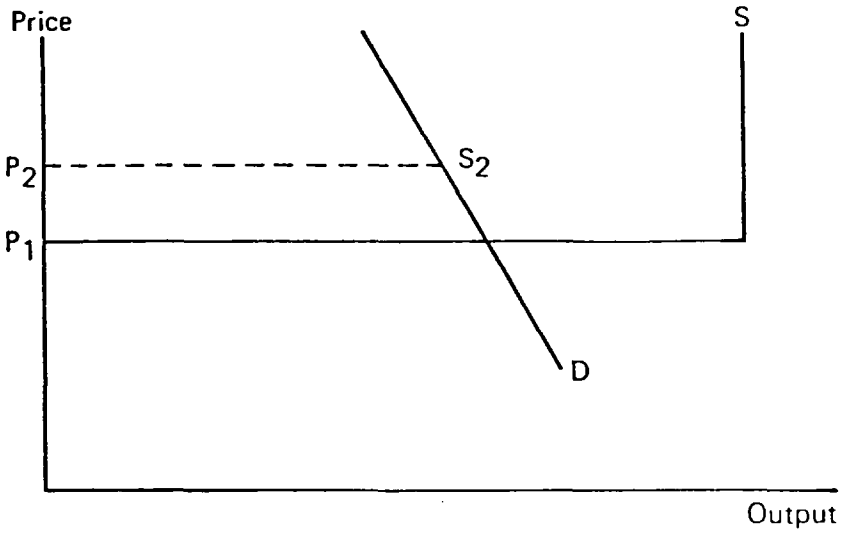

P_1 = Price without tax
P_2 = Price with tax

Case 2. IMPACT OF TAX WITH DIFFERENTIATED PRODUCT

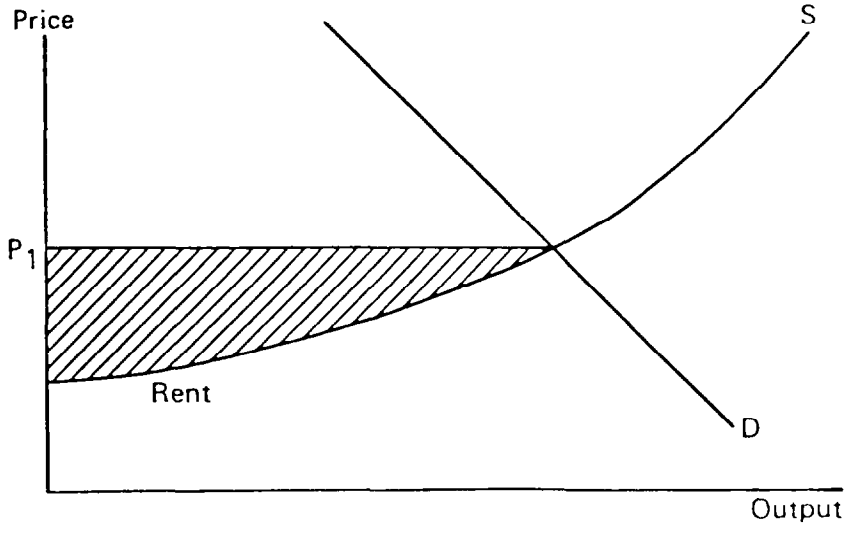

P_1 = Price without tax or when tax falls only on rent.

ability to pay, that might apply to its own residents. However, the nearly universal decision to subsidize the "producers" of tourism (i.e., hotels and related facilities) has effectively restricted the range of taxes available to the government in taxing tourism. 1/

This self-imposed limitation becomes clearer when taxation of tourism is compared with taxation of export goods. Exports of goods produced by residents are subject to income taxes, export duties, and marketing board arrangements. In fact, exports of such goods have historically been subject to high effective tax rates in many developing countries because they offer a convenient tax handle. Marketing boards for a number of export crops, for example, contribute large proportions of government revenue through profits made from buying crops from farmers at a lower price than that obtained from reselling in the world market. In addition, exports of goods are generally concentrated in specific localities or ports, where they can be checked by customs. Table 3 shows the importance of export duties as a percentage of total central government revenue in selected developing countries. In 11 countries export taxes accounted for between 17 and 36 percent of total government revenue.

By contrast, tourism offers an elusive tax base and a narrow range of tax choices. Tourists are not subject to income taxes and therefore must be taxed by expenditure-based or "head" taxes. Tourist expenditure, moreover, is fragmented and dispersed over a wide assortment of goods and services and takes place at many different localities and points of time. This dispersion of expenditure over space and time can present formidable problems of administration. Another conceptual difficulty in applying expenditure-based taxes is that tourist expenditure (i.e., the tourist tax base) should ideally be isolated from expenditure by the resident population, so that tax rates on tourist purchases could be determined according to the tourist's own elasticity of demand. The separation of tourist expenditure from resident expenditure is important because one can easily imagine that the degree of elasticity of tourist demand for a variety of goods and services would differ from that of resident demand. Ideally, one would wish to separate tourist purchases from resident purchases and tax each group at different rates. In practice this separation is only possible to a limited degree, and puts another constraint on potential exploitation of the tourist expenditure tax base. Empirical studies have shown, for example, that hotel charges, where tourist expenditures can be most easily separated from resident expenditure, account for only about one half of tourist expenditure.

1/ See below, however, for the example of Jamaica, where the Government has imposed taxes on hotels and related tourist enterprises.

Table 3. Export Duties as a Percentage of Total Revenue of Central Government, Selected Developing Countries

Country	Years	Export Duties as Percentage of Total Revenue
Ethiopia	1976-78	23.26
Rwanda	1978-80	25.42
Burundi	1975-77	22.16
Zaïre	1978-80	18.58
Sri Lanka	1978-80	36.27
Ghana	1975-77	30.15
Honduras	1979-81	17.94
El Salvador	1978-80	28.36
Grenada	1975-77	17.00
Peru	1978-80	22.35
Malaysia	1977-79	19.59

Source: From Vito Tanzi, Quantitative Characteristics of the Tax Systems of Developing Countries, Departmental Memoranda, International Monetary Fund, 1983.

Although tourist expenditure itself might be difficult to tax, one might tax instead residents who are the direct recipients of tourist expenditure. Again, however, incentives given for the purpose of developing tourism tend to block this alternative. Thus, the principal recipients of tourist expenditure--hotels--are widely granted effective exemption from income tax in developing countries. Practical obstacles to the taxation of tourism include, therefore, the fragmentation of the tax base (tourist expenditure); limits on the scope and variety of taxes available; and the difficulty of separating tourists and residents for purposes of taxation.

IV. An Empirical View: Taxation of Tourism in Selected Developing Countries

The aggregate view of international tourism has focused on the worldwide growth of tourist spending, the question of whether and to what extent tourism is a differentiated product giving rise to economic rent, and the practical difficulties of taxing tourism. In this section, the growth of tax bases in a sample of touristic developing countries is examined, along with the taxes actually imposed on tourism. The revenue yield and buoyancy of tourist taxes are assessed, as well as the recent tendency to raise tourist taxes. Fiscal incentives to tourism and the growth of duty-free shopping are seen as part of an overall strategy toward tourism, of which taxation is a part.

1. Taxes imposed on tourism

Taxes imposed on tourism reflect the limited tax handles available, constraints on the type of taxes that can be imposed, and the difficulty of isolating the tourist population from residents. The latter point touches on just how one is to define a tourist tax. Ideally, a tourist tax would not touch the resident population. If it were possible, for example, a model tourist tax would fall on total tourist expenditure. Reality, however, departs from this ideal. To begin with, an important part of the tourist's own expenditure (i.e., transportation costs from the home country to the tourist site) is effectively excluded from taxation by developing countries because tickets are generally purchased at origin and carriers are typically foreign. In fact, data on tourist expenditure customarily exclude international transportation costs to the tourist site.

The potential tax base for tourism then includes all tourist expenditure within the country. At one extreme some of this expenditure is undertaken exclusively by tourists, and taxation of such expenditure would fall (at least initially) exclusively on the tourist population. Data on tourist expenditure within the tourist country indicate that

hotel accommodation is the largest single item, and is also an expenditure for which the tourist population can be effectively isolated. In addition, a hotel tax is easy to administer. Thus, it is not surprising that the most common "tourist tax" is a tax on hotel accommodation. Other expenses at hotels, including food, beverages, and incidentals, also fall largely on the tourist population, so that the hotel room tax is often expanded to cover the complete hotel bill. Examples of this basic tourist tax are shown in Table 4.

For Jamaica the hotel tax consists of a substantial specific tax denominated in foreign exchange payable by the operator/owner of the hotel per guest night. This tax rate was doubled in the 1984/85 budget. In Kenya the hotel accommodation tax for room or room and breakfast is 15 percent for tourists and 10 percent in all other cases. The Fiji hotel turnover tax, applied to room changes, food, and beverages, was 3 percent before 1984 and raised to 5 percent in the 1984 budget. Among other tourist economies, Grenada has a 7.5 percent tax on hotel rooms, food, and drinks; St. Vincent and the Grenadines tax hotel accommodation and the supply of refreshments at 5 percent; and St. Lucia taxes hotel revenue derived from room charges, food, and drink at 7 percent.

The hotel tax is customarily assumed to fall on tourists (the consumers), inasmuch as their demand is assumed to be inelastic. However, package tour operators abroad in a competitive market could be forced to absorb the tax. In addition, market conditions involving substantial competition among hotels in a tourist country or among different tourist countries could lead to absorption of the tax by owners.

A less purely tourist tax is the embarkation fee, which is usually a specific amount. This tax generally applies to both residents and tourists. In Jamaica the travel tax amounts to J$20 (US$4.35) per person after several recent increases. The tax is payable by all travelers to destinations outside Jamaica. This tax is not a tax on expenditure itself, but rather in the nature of a "head" tax on residents and tourists, sometimes justified as a user fee for airport maintenance. Again, its main advantage is ease of administration. For Kenya, a similar air passenger tax is collected by the airlines on all passengers embarking at an airport on an external ticket. The charge is K Sh 100 (US$6.42) per passenger. Grenada similarly has an embarkation tax of EC$5.00 (US$1.85) per person. St. Lucia has an airport departure tax of EC$6.00 (US$2.22) for destinations within CARICOM and EC$12.00 (US$4.44) elsewhere. Hong Kong has a much higher embarkation tax of approximately US$15.00.

Table 4. Tax Rates on Hotel Occupancy Charges

Country	Rate
Jamaica	- US$12, US$10, and US$8 daily for categories A, B, and C, respectively (winter season). - US$8, US$6, and US$4 daily for categories A, B, and C, respectively (summer season).
Kenya	15 percent when charges include only room, or room and breakfast. 10 percent in all other cases.
Fiji	5 percent on hotel rooms, food, and drinks.
Grenada	7.5 percent on hotel rooms, food, and drinks.
St. Vincent and the Grenadines	5 percent on payments to hotels or the supply of refreshments.
St. Lucia	7 percent on hotel rooms, food, and drinks.
Dominica	10 percent on hotel room and liquor and tobacco sales.

Source: Budget documents of national authorities.

Beyond these two basic "tourist taxes" one begins to move into an area in which the tax falls predominantly on tourists, but at least in part on residents. Such "quasi-tourist" taxes fall on a range of services, such as restaurants, entertainment, and international telephone and telecommunications. When compared to the hotel and embarkation tax, the quasi-tourist taxes on restaurants and entertainment are more difficult to administer as they typically involve smaller and more numerous establishments. In a relatively populous tourist economy with a sizable local middle and upper class, taxes on this range of services would be paid in significant amounts by residents, whereas in a smaller economy with a larger percentage of poor people the tax burden would fall almost exclusively on tourists. This distinction is important because the elasticity of demand for the resident and the tourist would be expected to be quite different. A tourist with a given length of stay, less information, and a higher income level might have a more inelastic demand for services such as restaurants and entertainments, and would in theory be willing to pay much higher tax rates than a resident. In practice, however, the two populations--residents and tourists--cannot be effectively separated for this purpose.

Examples of such quasi-tourist taxes include Jamaica's entertainment duty levied on admission tickets for cinemas, horse races, shooting competitions, and bicycle races. This tax is levied at various rates, from 8 1/3 to 16 2/3 percent of the purchase price. Kenya similarly has a betting and gaming tax with varying rates and an entertainment tax levied on entrance charges of approximately 15 percent of the purchase price. Fiji introduced in the 1984 budget a turnover tax on miscellaneous services such as videotapes, admission fees to night clubs, drinks and meals in bars, hotels, clubs, and licensed restaurants, hire charges for rental cars, and bets placed through licensed restaurants. The rate of this tax is 5 percent. Elsewhere, Grenada taxes cinema tickets at 15-20 percent of their price.

Another "quasi-tourist" tax is that on telephones and telecommunications. This tax is not as prevalent as the basic hotel and restaurant taxes. Jamaica has experimented with a tax on international telephone calls but the tax was rescinded because tourists began to call collect and revenue collapsed. A telecommunications tax also exists in Kenya, and Grenada taxes telephone calls outside the country.

While the above taxes are aimed primarily at the tourist population a third category of "tourist taxes" would include taxes paid by tourists but falling primarily on residents. This category would include imports, sales, and excise duties. Again, the issue here is that the tourist may have a more inelastic demand for these goods and

could in theory be taxed at a higher rate to the extent that the resident and tourist populations could be separated. In practice, however, these goods are taxed by undifferentiated rate sales, imports, or customs duties, because there is no way to separate effectively the rates for tourists and residents. An estimate of the importance of this category of tourist taxes was made for Fiji, where they were found to account for nearly a third of tax revenue falling directly on tourists. In tourist economies with higher rates on basic tourist taxes this proportion would presumably be smaller.

Finally, mention must be made of duty-free goods available to tourists. In this case the tax on tourists is zero and is part of an inducement to tourists to come to the country. Administration of duty-free areas is designed to separate the tourist and resident populations. Administration varies from strict systems where goods are delivered to bonded areas or to international flights to more informal systems requiring some type of identification that the buyer is a tourist. In Europe tourists are allowed to buy gasoline at lower prices, and rebates from value-added tax for purchase by tourists are given in France and the United Kingdom. As an example of the difficulties of administering an informal system, in Fiji duty-free imported goods (for which actual duties range from 0 to 10 percent) are sold in shops presumably frequented mainly by tourists, but also by residents. These goods include consumer durables such as perfume, jewelry, cameras, shavers, calculators, televisions, radios, stereo equipment, and videotape recorders. A significant proportion of the purchases of these goods, which ordinarily would be subject to high import duties, is made by residents. Thus, without a strict system of delivery to bonded areas, duty-free systems can be abused with residents taking advantage of lower tax rates.

An overview of taxes imposed on tourists is given in Table 5. As this table illustrates, tourist taxes tend to be relatively uniform in different economies. This uniformity is apparently due to the constraints on tax handles and types of taxes that can be imposed. In addition, tourist taxation is relatively recent, and tourist economies may copy each other in choosing taxes. The similarity of taxes on tourism contrasts with the wide variety of taxes on exports of goods.

2. Growth of tourist tax bases

The growth of potential tourist tax bases (tourist expenditure within the country) is shown in a sample of tourist developing countries in Table 6. These country data bear out the aggregate data which show that while tourism is a growth industry in a number of developing countries, it is subject to fluctuations based on economic activity in major origin countries. For the sample as a whole the annual average

Table 5. Taxes Imposed on Tourists

Type of Tax	Population Paying Tax	Ease of Administration
Pure tourist taxes		
Hotel tax and embarkation fee	Almost exclusively on tourists	Easy to administer
Quasi-tourist service taxes		
Restaurants Entertainment International telephones	Mainly on tourists	More difficult to administer
Taxes on ordinary goods		
Sales, customs, and excise taxes	Mainly on residents	More difficult to administer
Zero taxes on tourists		
Duty-free goods	In theory exclusively on tourists	Difficult to separate tourist and resident populations without formal procedures

Table 6. Growth of Tourist Expenditure as a Tax Base: Selected Developing Countries

	(In Millions of SDRs)				Annual Average Increase (In SDRs)			Annual Average Increase (In Local Currency)
	1969	1974	1979	1982	1969-82	1974-75	1978-79	1969-82
Bahamas	--	272.7	434.6	605.8	10.2	-5.5	9.9	9.1
Fiji	21.2	62.9	96.3	138.5	15.5	-2.2	15.9	13.5
Dominican Republic	17.7	44.5	95.9	241.0	22.0	8.7	30.1	23.0
Costa Rica	17.4	40.3	57.1	120.2	16.0	5.7	-1.2	32.0
Haiti	5.4	15.4	50.1	72.1	22.0	16.9	15.7	21.0
Jamaica	93.5	110.8	151.2	304.5	9.5	-4.5	28.9	17.0
Kenya	--	62.9	134.8	203.8	12.1	19.1	1.1	17.1
Morocco	121.0	197.0	332.0	373.0	9.1	23.9	5.1	11.7
Nepal	--	--	34.7	57.3	21.0	--	28.8	23.0
Panama	65.3	101.0	126.1	155.8	6.9	-20.6	7.0	7.7
Peru	40.0	80.0	146.0	292.0	16.5	-6.3	29.2	51.0
Philippines	40.0	48.0	184.0	407.0	19.5	87.5	9.5	29.0
Sri Lanka	2.9	11.8	52.5	116.6	33.0	22.9	37.1	63.0
Thailand	85.0	155.0	425.0	940.0	20.0	16.8	21.8	22.0
Tunisia	54.0	158.0	466.0	563.0	19.8	59.5	36.3	22.0

Source: Balance of Payments Yearbook, International Monetary Fund.

increase of tourist expenditure measured in SDRs for the period 1969-82 was 17 percent -- a much higher figure than growth in GDP for the same period. If the data are measured in local currency, the average annual increase in tourist expenditure is 24 percent. (A number of the countries--Costa Rica, Jamaica, Kenya, Peru, the Philippines, and Sri Lanka --underwent substantial currency devaluations during the 1969-82 period.)

The growth of tourist expenditure within tourist developing countries is especially impressive in view of the fact that during 1969-82 two oil price increases took place. More expensive oil sharply increased the transportation costs of international tourism. The initial oil price increase resulted in much lower rates of growth for tourism in 1974-75 for most countries in the sample, and even negative rates for five countries. The second oil price increase had a lesser impact in lowering growth rates for tourism in most sample countries. The resumption of growth in tourism after each of the oil shocks implies a price inelastic demand for international tourism in the developing countries in our sample.

3. Revenue yield and burden of tourist taxation

Revenue yields from tourist taxes can be expressed as a percentage of the potential tax base, indicating the effective rate of taxation of tourist expenditure. Revenue from tourist taxes can also be compared to total tax revenue to indicate the dependence of the revenue system on taxation of tourists. From both perspectives, taxes on tourist expenditure are quite modest, particularly when compared with export taxes on goods.

Table 7 shows the effective tax rate on the base of tourist expenditure for a diverse group of developing economies. The effective rate of taxation is expressed as a percent of the potential base in both U.S. dollars and local currency because the currency of Jamaica and Kenya depreciated substantially in the last decade. In general, the table shows that effective tax rates are quite low, although they have risen in the last decade. Using U.S. dollars as a tax base, the effective tax rate in Jamaica has risen from 2.9 to 6.3 percent between 1972 and 1983, whereas in Kenya the comparable effective rate remained relatively constant at 9 percent. In both countries, however, when the tax base is expressed in local currency, the effective tax rate declined, indicating that revenue yields from tourist taxes did not keep pace with the depreciation of the local currency. Other effective rates for the latest year available were Fiji, 2 percent; the Bahamas, 3.7 percent; Barbados, 6.3 percent; St. Vincent and the Grenadines, 1.2 percent; and St. Lucia, 2.7 percent.

As a comparison to these effective rates for tourism, the effective rates on commodity exports for a group of commodity exporting countries are shown in Table 8. Relating export tax receipts to the potential

Table 7. Tourist Taxes Compared with Tourist Expenditures and Total Tax Revenue

	1972/73	1973/74	1974/75	1975/76	1976/77	1977/78	1978/79	1979/80	1980/81	1981/82	1982/83	1983/84	1984/85
Jamaica													
Tourist taxes as percent of tourist expenditure in local currency	3.4	3.1	3.3	3.4	5.9	15.1	8.7	2.9	2.6	3.0	3.3	1.9	...
Tourist taxes in local currency as percent of tourist expenditure in U.S. dollars	2.9	2.8	3.0	3.1	5.4	13.8	14.7	6.3	4.7	5.3	5.8	6.3	...
Tourist taxes as percent of total tax revenue	1.3	1.1	1.1	0.9	1.0	3.2	3.1	1.5	1.3	1.4	1.4	1.7	...
Kenya													
Tourist taxes as percent of tourist expenditure in local currency	--	--	21.1	16.6	17.5	14.4	13.7	16.9	18.5	16.9	12.9	--	...
Tourist taxes in local currency as percent of tourist expenditure in U.S. dollars	--	--	9.2	8.0	8.5	7.0	6.6	8.2	8.9	10.1	9.1	--	...
Tourist taxes as percent of total tax revenue	--	--	3.0	2.6	1.8	1.4	1.4	2.1	1.8	2.7	2.6	2.6	...
Fiji 1/													
Tourist taxes as percent of tourist expenditure in local currency	--	--	--	--	--	--	--	--	--	2.2	2.0	--	...
Tourist taxes as percent of total tax revenue	--	--	--	--	--	--	--	--	--	1.3	1.4	--	...
Bahamas 1/													
Tourist taxes as percent of tourist expenditure in local currency	4.9	4.7	4.2	4.2	4.3	3.6	3.7	4.6	4.2	3.7	3.5	3.7	...
Tourist taxes as percent of total tax revenue	15.6	15.1	13.3	13.7	12.9	11.2	11.4	13.0	11.8	11.0	10.6	10.8	10.6
Barbados 1/													
Tourist taxes as percent of tourist expenditure in local currency	2.7	1.9	2.4	3.3	3.2	3.8	4.0	3.9	5.4	4.4	3.9	5.5	6.3
Tourist taxes as percent of tax revenue	3.6	2.4	2.7	3.3	3.2	4.2	4.6	5.1	5.6	4.8	4.5	5.5	5.6
St. Vincent and the Grenadines													
Tourist taxes as percent of tourist expenditure in local currency	--	--	--	--	--	--	--	1.4	1.3	1.2	1.1	1.2	...
Tourist taxes as percent of tax revenue	--	--	--	--	--	--	--	1.4	1.6	1.2	0.8	0.9	...
St. Lucia													
Tourist taxes as percent of tourist expenditure in local currency	--	--	--	--	--	--	--	3.9	2.7	2.7	2.1	2.7	...
Tourist taxes as percent of tax revenue	--	--	--	--	--	--	--	5.2	3.8	3.5	2.5	3.2	...

Source: Budget documents of national authorities.

1/ Comparable data not available for earlier years.

Table 8. Effective Tax Rate on Exports:
Selected Developing Countries

	1979-81
Ghana	25.7
El Salvador	12.1
Zaire	14.9
Rwanda	39.1
Sri Lanka	22.5
Burundi	21.6
Ivory Coast	7.7
Malaysia	10.9
Guatemala	8.4
Guyana	17.9
Sierra Leone	9.8

Sources: For revenue data, Government Finance Statistics, International Monetary Fund. For export data, International Financial Statistics, International Monetary Fund. Data for Rwanda, 1980-81; for Ivory Coast, 1980; and for Burundi, 1979-80.

base, the effective rate on commodity exports averaged 17.3 percent, and ranged as high as 39 percent. In a comparison of the dependence of the revenue system on tourist taxes with commodity export taxes, a similar contrast emerges. Tourist taxes as a percent of total tax revenue are 1.7 for Jamaica; 2.6 for Kenya; 1.4 for Fiji; 0.9 for St. Vincent and the Grenadines; and 3.2 for St. Lucia. Somewhat more significant proportions are found in the Bahamas (10.6) and Barbados (5.6) (Table 7). As noted earlier, commodity export taxes as a percentage of total revenue ranged from 17 to 36 percent in a group of commodity exporting countries.

Despite the relatively low level of taxation of tourism, tourist taxes show a rising trend in recent years. The trend is particularly striking in Jamaica: the 1984/85 budget included a doubling of the hotel room tax, a doubling of the travel tax on tourists leaving Jamaica, a tax on the sale of U-drive vehicles, a tax on villas in lieu of property tax, and the introduction of substantial license fees on hotels and duty-free shops. In Fiji, the 1984 budget included an increase in the hotel turnover tax from 3 to 5 percent; and the introduction of a turnover tax on miscellaneous services such as admission fees to night clubs, expenditures at bars and restaurants, rental car charges, and bets at licensed casinos. Rates on the basic tourist tax on hotel accommodations have risen in recent years in other tourist countries. The stimulus for these increases is clearly the rising trend of fiscal deficits and consequent pressure to increase revenue.

4. Fiscal strategy towards tourism

Taxation of the tourist population represents one facet of a fiscal strategy towards the tourist sector. Complementing the generally low taxation of tourists, developing countries have typically subsidized the tourist sector through tax exemptions and other fiscal incentives to hotels and related enterprises. The most common form of legislation in a developing country is a Hotel Aids Act, generally introduced in the 1950s, granting duty-free entry of building materials and equipment for hotel construction and operation to approved license holders, as well as exemption from income, property, and profits taxes for periods of about ten years.

Since fiscal incentives are not our central theme a thorough assessment is not attempted here. Selected examples, however, convey the generosity of fiscal incentives toward the tourist sector. In Dominica, the Hotels Aid Ordinance and Income Tax Act combine to provide a ten-year exemption from customs duty and income tax for hotels of at least six rooms. In practice, exemption from consumption tax or inputs is frequently included when a license for tax holidays is granted to

an enterprise. In Fiji, hotels are given important income tax concessions. Under the Hotels Aid Ordinance, a hotel owner may deduct 55 percent of capital expenditure (less the cost of land) against annual chargeable income earned from the hotel or extension until claimed in full. If not used within five years, this concession can also be used to reduce profits of any other hotel operated by the taxpayer. Hotel companies may also claim an ordinary depreciation allowance on the full capital expenditure for buildings and equipment in addition to the 55 percent investment allowance. Alternatively, the hotel owner may receive a cash subsidy of up to 7 percent of the approved capital expenditure. The net expenditure after the setoff of subsidy may be written off entirely within 15 years. Hotel owners may also take advantage of incentives involving accelerated depreciation.

While such examples could be multiplied throughout the developing world, expert opinion has generally held that subsidization of tourist producers has been overdone. As a recent study concluded, "most Caribbean islands seem to have been so anxious to attract investors in the hotel sector that they have granted concessions for prolonged periods without questioning the suitability of location, economic viability, phasing, employment effects...or appropriateness of type or size of hotel to be built. Some exceptional cases do exist where hotels have forfeited their concessionary privileges or where applications have been refused. However, most hotels in the Caribbean seem to have been built with assistance from incentives legislation. Bermuda alone has never introduced legislation granting general concessions to hotels. Bermuda has been successful in attracting hotel development over a number of years, which casts doubt on the wisdom of the Caribbean islands, in giving rather indiscriminate assistance to developers and investors who might have been attracted to the region in any event and thus could have contributed more to the local economy through taxation." 1/

5. Tourist taxation as a revenue source

This survey of tourist taxation has shown that the tourist sector is generally lightly taxed. 2/ The effective rate of taxation to total tourist expenditure is typically low, and tourist producers (e.g., hotels) are generally granted exemption from income and property taxes as well as indirect taxes on inputs such as imported raw materials and

---

1/ Incentives to Tourism in the Caribbean Region, A Study for the World Bank by the Shankland Cox Partnership, London (1974).

2/ As noted above, the measures of tourist taxation do not include indirect "multiplier" effects of tourist spending on revenue. Because of the limited linkages between tourism and the rest of the economy in developing countries, these indirect effects are not likely to be significant.

capital equipment. Nevertheless, taxes on hotel accommodations and on other tourist expenditures have been increasing recently in response to revenue demands. An important policy question, then, is to what extent taxation of tourism could be increased in response to an overriding need to reduce the fiscal deficit. In addressing this question both taxation of tourist expenditure and of tourist producers should be considered.

With regard to taxation of tourist expenditure, two possibilities for increased revenue exist. First of all, rates of existing taxes on hotel accommodations could be raised. Secondly, taxes could be imposed on tourist expenditure that has escaped the tax net. The advisability of raising taxes on tourist expenditure in a given country depends on its elasticity of demand. If demand is judged to be inelastic, tourist taxes could be raised to produce more revenue. Empirical work on this topic has been limited to tourist behavior in major origin countries. Measurements have been made of the cross price elasticities of demand for tourist travel (i.e., the extent to which tourists respond to changes in price between one destination and another). After an analysis of data on tourists leaving the United Kingdom, the United States, the Federal Republic of Germany, France, and Japan, a recent study concluded that there is evidence that travelers switch their pattern of travel between destinations in response to relative changes in costs. For the United Kingdom switching was found among European destinations in response to changes in relative prices, with elasticities averaging around -2.8 percent. A similar average cross price elasticity was found for Americans travelling to areas such as Canada, Mexico, West Indies, Central America, Europe, the Mediterranean and other destinations. A current example of response to price incentives is the booming travel from the United States to Europe, based on the appreciation of the U.S. dollar.

Given ample evidence of price responsiveness in travel behavior it would appear that the basic hotel and accommodations tax for a given country should not be far out of line with its neighbors, after allowing for differences in tourist "quality" among countries. This conclusion would hold whether the incidence of the tax is assumed to be shifted forward to the foreign traveler or absorbed by tour operators or hotels. A possibly more rewarding avenue for increased revenue would be to raise taxes on tourist discretionary expenditure that falls outside the package tour essentials. Revenue measures of this type could include taxes on restaurants outside hotels, local travel tours and car rentals. If these items are perceived by the tourist as discretionary expenditure outside the basic package by which tourist destinations are compared, demand may then be more inelastic.

Since taxation of tourist expenditure is limited by the competitive nature of the tourist trade, taxation of tourist producers could be considered as a more promising alternative. Presently tourist hotels and related enterprises are granted exemption from direct taxes on profits, windfall gains on property, and indirect taxes on imported inputs. In the face of an overriding demand for revenue these concessions could be tightened: tax holidays and income tax exemptions could be limited, property taxes could be applied, and customs duties could be applied to inputs. Such changes, even if existing legislation were altered for new entrants, would reduce the current subsidy to tourist producers. Assuming that tourist producers largely absorbed the new taxes, the competitive position of the country would not be changed.

V. Summary and Conclusions

International tourism is a recent, rapidly growing economic activity in which demand stems primarily from high-income, tourist-generating countries. The tourist market is dominated in numbers and expenditure by domestic tourism and foreign tourism among high-income countries. Although marginal players on the world tourism scene, developing countries have participated to the extent that tourism accounts for a high share of foreign currency earnings in a subgroup of "touristic" developing countries.

An important question concerning the world tourist market is to what extent an individual tourist country, and especially a developing tourist country, offers a differentiated product to which economic rent could accrue. This question bears directly on the possibility of taxing economic rent. Although isolated examples of unique tourist attractions undoubtedly do exist, the size and variety of the tourist market indicate that it is generally very competitive, and especially so with regard to the "sun and sand" resorts that make up much of the tourism of developing countries.

Empirical examination of touristic developing countries bears out this conclusion, as effective tax rates on the tourist expenditure base are generally quite low. Taxation of tourism thus offers an interesting contrast to the heavier burden of taxation on traditional export commodities such as cocoa, coffee, and tea. In addition to the perception of tourism as a competitive product, the relatively low taxation of tourism may reflect difficulties in taxing the tourist base. Unlike export commodities which offer a good tax handle, the tourist expenditure base is fragmented and sometimes difficult to isolate from resident expenditure. "Producers" of tourism (hotels and related facilities) are typically exempt from direct and indirect taxes.

A typical spectrum of tourist taxes includes a hotel tax falling primarily on tourists, taxes on services falling in part on residents, taxes on sales and imports falling mainly on residents, and duty-free or zero-rate taxes on tourists. An inherent administrative constraint on effective tourist taxation is that the tourist population cannot always be effectively separated from the local population for tax purposes. If the tourist population could always be separated, tax rates paid by tourists might be set higher for goods and services for which tourist demand is inelastic. In practice, however, it may be difficult to separate the two populations.

When taxation of tourism is considered together with other fiscal policies toward the tourist sector, a clear pattern of subsidization of tourism is seen in contrast to the often heavy taxation of exports of traditional commodities. In the typical tourist economy the most direct recipients of tourist expenditure--hotels--are virtually exempt from income and property taxes through fiscal incentives such as tax holidays and rapid depreciation allowances. Inputs for hotel construction and maintenance are also typically exempt from taxation. Although the present policy leans toward subsidization it must be said that the rates and scope of tourist taxation have been increasing recently, probably owing to the pressure of reducing fiscal deficits. If more revenue is needed from the tourist sector, such revenue should stem mainly from reducing subsidies given to producers instead of raising rates on tourist expenditure.